SAMBO SINCE 1980

ISO 9001 : 2008
Certificate No. : 37314

1S161207-SIQW61

1S160913-SITQ13

NO. TC RU C-KR.
AB61.B.0005/18

SINCE 1980

Global Leader

SAMBO GEAR ACTUATORS

FOR INDUSTRIAL VALVES

High Quality Gear Actuators
High Performance & Efficiency

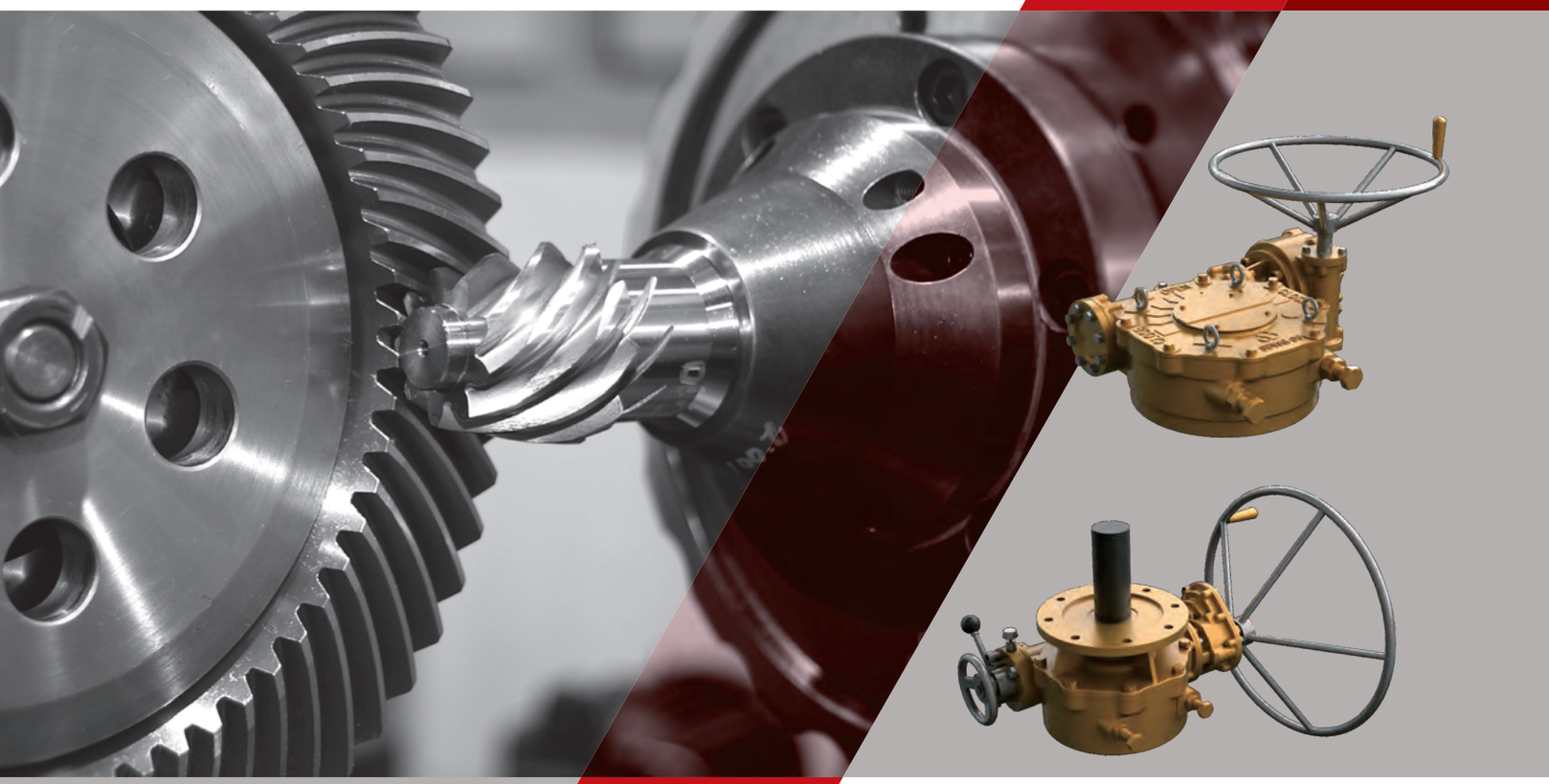

SAMBO
www.sambo21.com

FOR INDUSTRIAL VALVES

High Quality Gear Actuators
High Performance & Efficiency

Global Leader
SAMBO
GEAR ACTUATORS for Industrial Valves

SAMBO
The World's Highest Quality!

Innovation & Change for Customer

High Quality Gear Actuators · High Performance & Effeciency

Welcome to SAMBO INDUSTRIAL CO., LTD.

- The endless and glorious Korean moutain range has inspired SAMBO to follow an aggressive path for implementing the latest leading technology and manufacturing techniques.
- It is our commitment to be the world' s leading provider of high quality and competitive priced products offering best possible deliveries.

General Information

- At SAMBO Industrial Co., Ltd., we are comitted to developing the most advanced products for the 21st century.
- Our highly skilled staff of engineers have over 36 years of experience in the field of valve control.
- Quality is the No. 1 priority throughout our company including manufacturing, engineering and customer service.

Valve gear actuators and kit solution · worldwide

- We, SAMBO IND. CO., LTD. established in 1980 and we are special company for manufacture of gearbox.
- Based on long experience and skill, our quality is No.1 priority in Korea market.
- Also, we have a good reputation from all over the world.
- We have many efforts to make best quality and new model and our continuous R&D will make us the most advanced product, competitive price and we try to make gearbox company for better tomorrow.
- We promise to make development through challenge mind, passion and long experience of management.
- We will do our best to make No. 1 priority company all over the world.
- In the future, we would highly appreciated if you supply any advice for our improvement.

Global Leader
SAMBO
GEAR ACTUATORS for Industrial Valves

VISION · CORE VALUE

We promise to make development through challenging mind, passion and long management experience.

Great Innovation

Great Challenge

Great Partnership

01 SAMBO Quality Policy

1. Establishment of Quality System
2. Realization of Customer Satisfaction with Quality Control
3. Results from Quality

02 SAMBO Quality Objective

1. 100% Objective Achievement
2. Quality elevation through continuous improvement
3. 10% Prime cost reduction

Global Leader
SAMBO
GEAR ACTUATORS for Industrial Valves

HISTORY >>>

Innovation & Change for Customer

1980. 03.	Established as SAMBO COMPANY
1990. 01.	Changed company name SAMBO INDUSTRIAL
1995. 03.	Introduced Quality Controll System
1995. 09.	Obtained the membership of KITA (Korea International Trade Association)
1997. 01.	Changed company name SAMBO IND CO., LTD.
1997. 03.	Moved into Kwaebeop-dong, Sasang-gu, Busan, Korea
1999. 09.	Launched computerized operation system covering all company activities (ERP system)
2000. 08.	Enrolled the membership of KITA (Korea International Trade Association)
2001. 10.	Launched web-site service (http://www.sambo21.co.kr)
	Selected as a promising compony by the Busan Bank, Korea.
	Enrolled Utillity model (Korean Intellectual Property Office)
2002. 07.	Obtained CE Mark by Lloyd' s Register
2002. 08.	Approved ISO 9001:2000 by ABS Quality Evaluations Inc.
2002. 11.	Enrolled Trademark (Diagram+SAMBO)
2003. 01.	Selected as a Military Manpower Company
2005. 11.	Selected as a Clean Factory
2006. 08.	R & D Center Organization by KOITA.
2006. 09.	Approved Venture Company by KOTEC (Korea Technology Finance Corporation)
2006. 11.	Factory extension and complete range of actuators offered any where At present SAMBO believes we offer the most extensive
2007. 03.	Enrolled the membership of Busan Machinery Cooperatives
2007. 11.	Receiving Export prize (44th Trade Day)
2008. 06.	Selected as Export Venture Company (SMBA)
2008. 08.	Established SAMBO Skill Research (KOITA)
2008. 09.	Certified INNOBIZ : Approved member of INNOBIZ (SMBA)
	Approved INNO-BIZ Company by SAMBO (Small & Midium Business Administration)
2008. 10.	Approved as Venture Company (KIBO)
2008. 11.	Receiving Export prize (45th Trade Day)
2009. 03.	Receiving Award of Best Taxpayer (43th Taxpayer's Day)
2010. 10.	Approved Exporter with certificate of origin by Busan Customhouse.
2011. 03.	Receiving Award of Best Taxpayer (45th Taxpayer' s Day)
2011. 04.	Starting constructurion for new factory (#561-5, Kwaebeop-dong)
2011. 07.	Selected as BS Small Giant Company from Busan Bank
2012. 01.	Completion of New Factory
2012. 09.	Approved As A "A PLUS VENTURE COMPANY" by KOTEC
2012. 12.	Approved As A "LEADING ENTERPRISER" by Busan Metropolitan City
2013. 05.	Approved As A "EXELLENT EMPLOYMENT COMPANY" by Busan Metropolitan City
2014. 07.	Grand prize in Small Business Awards hosted by Busan Metropolitan City
2014. 12.	Receiving Export prize (US $ 10M)
2015. 05.	Awarded Presidential Medal for Small and Medium Scale business
2015. 12.	Approved as Leading Company by Busan Metropolitan City
2016. 09.	Completion of 2nd Factory
2017. 12.	Obtain Industrial Property Patent
2018. 04.	Build New-ERP System
2019. 12.	Receiving Export prize (US $ 20M)
2020. 11.	Selected 100 Small Companies for Materials, Parts and Equipment

SAMBO
The World's Highest Quality!

Power Plant >>>

SAMBO specializes in producing actuators and related equipment for every part of the power generation industry.

We have a full range of actuators, all designed to meet the stringent requirements of the power generation industry to provide the levels of durability and reliability. We provide actuators for new projects and also provide complete customer support programs, including free replacement and maintenance. Our customer service is exceptional, always meeting our customers' requirements circumstances.
Actuators help control everything that happens in a power plant. SAMBO actuators are accurate, robust and efficient. All our actuators are designed to endure in all types of extreme (temperature, tremble, and dust) conditions. Backed by full customer service support, SAMBO provide the control, lower cost, low emissions and a safe environment.

Water resources >>>

SAMBO serve the water industry worldwide, which have been developed and fine-tuned to meet the specific needs of our water company customers.

As a company specialize in water resources, we do our best to meet our customers' specific requirements.
SAMBO valve actuators are widely recognized as being the most technically advanced, reliable, durable, waterproof, and user-friendly actuators in the valve business.

Oil & Gas >>>

SAMBO specializes producing actuators and related equipment for every part of the petro-chemical industry, including production, processing, distribution and storage.

With over 30 years' experience in serving the industry, we are the world's most recognized independent manufacturer of heavy duty valve actuators and our products control thousands of valve in petro-chemical plants across the world. Actuators help control almost everything that happens in a petro-chemical service, support resulting in precise control, lower costs, lower emissions and safe environment.

General industry >>>

At SAMBO, we are working behind the scenes to help move, control and protect products that our customers depend on.

As a trusted partner, our success in valve markets worldwide shows our continued strength in these various industries. We produce actuators and related equipment for shipbuilding industries and other general industrial companies. The SAMBO actuators designed to endure in all types of conditions.
All of our actuators are eligible for free inspection, maintenance, and replacement during the warranty period.

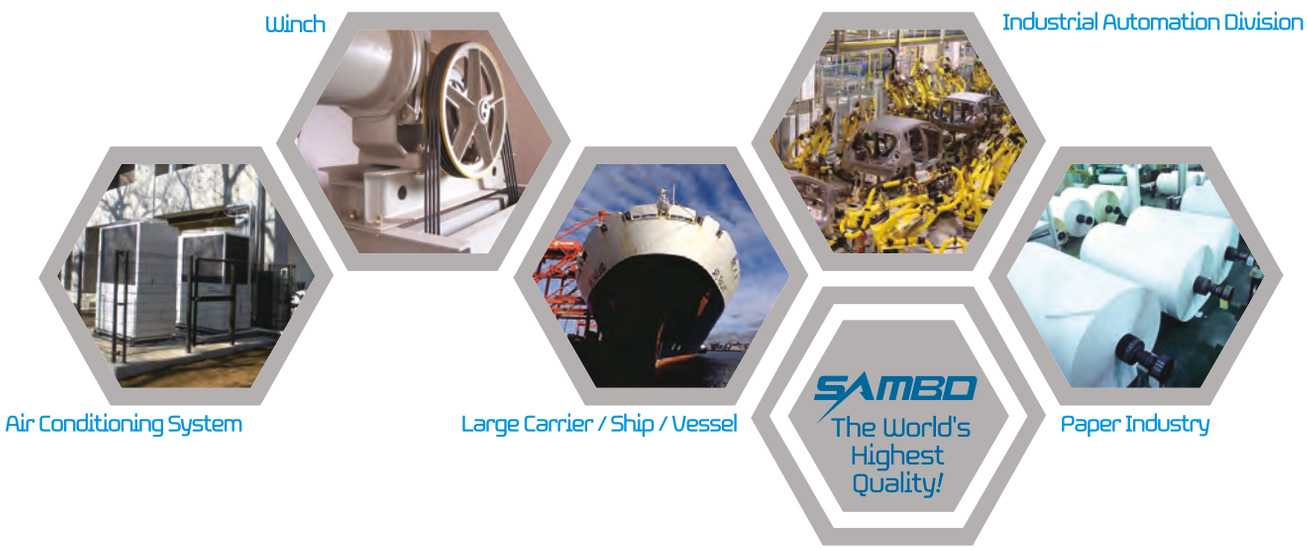

SAMBO

CONTENTS

Spiral Bevel Gear Actuators >>>

The World's Highest Quality!

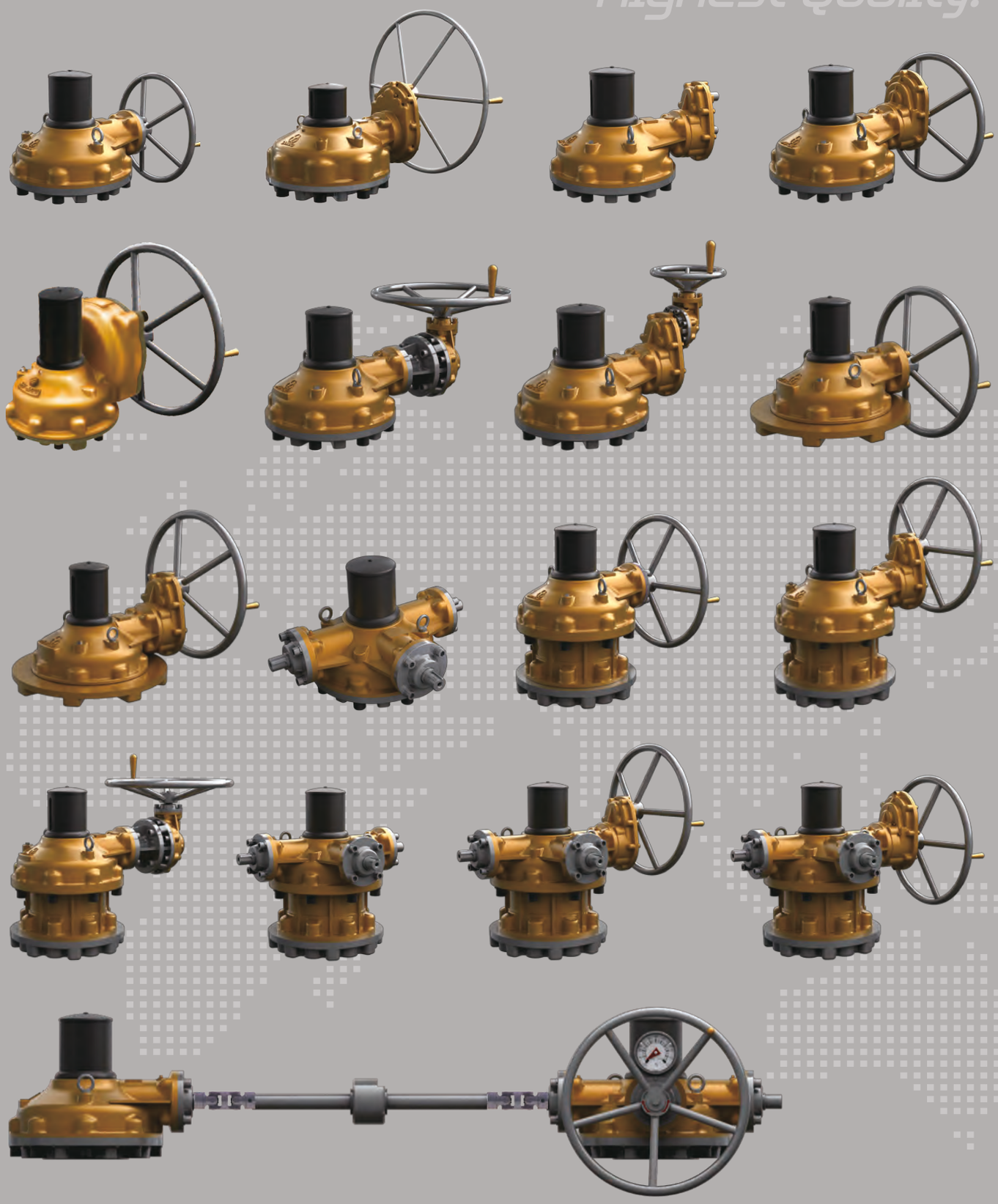

Size and component specification in this catalgue are subject to change without prior notice for quality improvement.

Global Leader

SAMBO

GEAR ACTUATORS for Industrial Valves

Spur Gear Actuators >>>

Worm Gear Actuators >>>

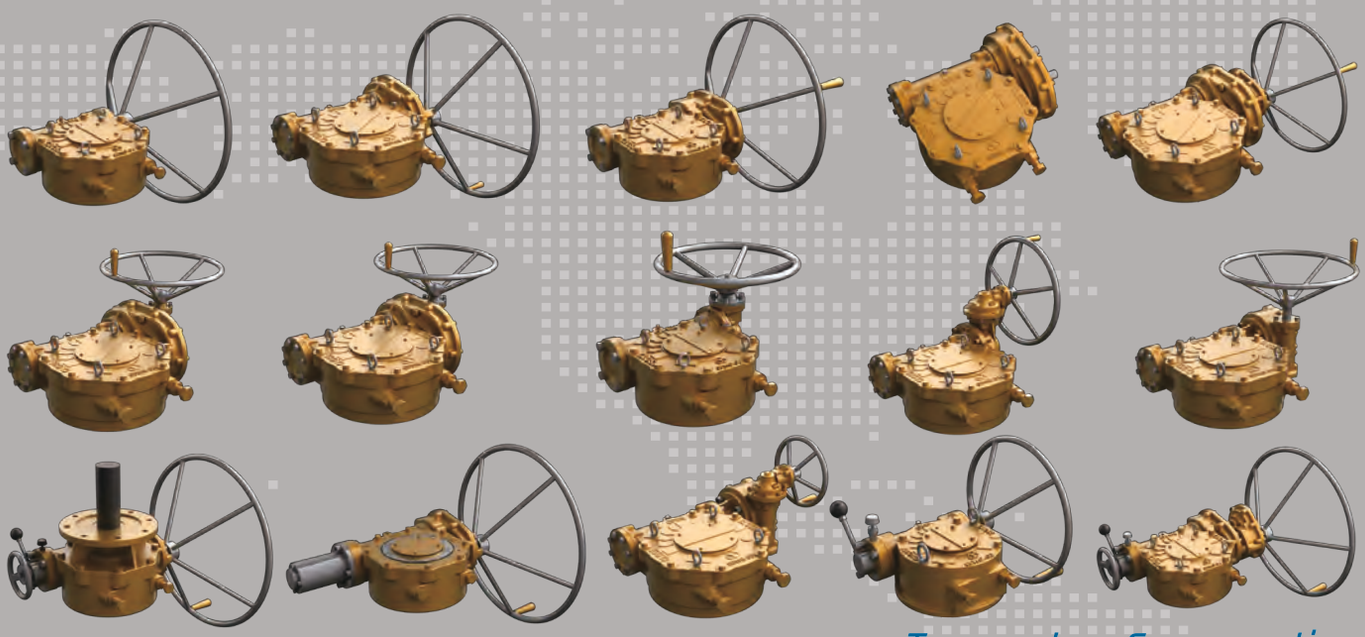

Planetary Gear Reducer

Torque Limiter

Temperature Compensating Spring-loaded Stem Nut

SE Series Quarter-Turn

Subsea Gear Box

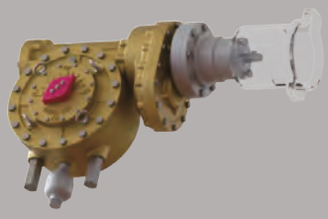

Air Cylinder

Size and component specification in this catalogue are subject to change without prior notice for quality improvement.

Spiral Bevel Gear Actuators

① Spiral Pinion and Spiral Bevel Gear

Pinion gear is 1045 heat treated steel. Bevel Gear is 1045 steel. Both gears are precision cut.

② O-ring

Units are completely O-ring sealed, suitable for temporary submergence to meet IP67 Class.

③ Spherical Roller Bearing

This input Bevel pinion is fully supported on deep groove ball bearings to provide excellent radial support.

④ Gaskets

The Base & end cap is sealed by a Non-asbestos Gasket to prevent any leakage and is waterproof.

⑤ Thrust ball or Self-Aligning Thrust Roller Bearing

Provides anti-friction capacity and are high load type.

Size and component specitication in this catalogue are subject to change without prior notice for quality improvement.
* Mark has been changed and updated.

Global Leader
SAMBO
SPIRAL BEVEL GEAR ACTUATORS

The World's Highest Quality!

Grease ZENITH EPSB 2 >>>

Each unit has a Alumite Grease type fitting and a grease plug for adding lubricant.

The SB-V Series of Spiral Bevel Gear ranges up to 75,000Nm (55,317ft-lbf) Torque and Thrust capacities up to 7,300KN (2,585,300 lbf)

Stem capacities are up to 230mm (9.05inch).
A high Load design, type SB-VH is also available ranging up to 142,000Nm (104,734ft-lbf).
Thrust capacities up to 11,500KN (2,585,300lbf) stem capacities are up to 270mm (10.63inch).

⑥ Dual Locking Nuts

This design incorporates dual locking nuts which provide a jam Effect for positive locking.
No set screw or pinning is required.

⑦ Stem Nut

A unique top Entry Replaceable stem Nut.
After long years of service can be easily replaced without removing Gear from valve.
Material is high tensile brass providing both corrosion and abrasion resistance.

⑧ Drive Sleeve

Also Ductile Iron, Class 65-45-12. supports both axial and radial loads.

⑨ Housing and Base

All external castings are Ductile Iron. Class 65-45-12, Tensile Strength of 65,000 psi.
This provides high strength and excellent impact resistance.

Size and component specification in this catalogue are subject to change without prior notice for quality improvement.
* Mark has been changed and updated.

Spiral Bevel Gear Actuator Assembly

STANDARD TYPE - A

Thrust & Torque Horizontal Input

Part List & Material >>>

	NO	DESCRIPTION	MATERIAL			REMARK
			NAME	JIS	ASTM	
STANDARD	1	Housing	Ductile Iron	FCD-450	A536-65-45-12	NOTE.1
	2	Base	Ductile Iron	FCD-450	A536-65-45-12	NOTE.1
	3	Spiral Bevel Gear	Carbon Steel	S45C	A576-1045	
	4	Spiral Pinion	Carbon Steel	S45C	A576-1045	NOTE.2
	5	Drive Sleeve	Ductile Iron	FCD-450	A536-65-45-12	NOTE.1
	6	Dual Lock Nuts	Carbon Steel	S45C	A576-1045	
	7	End Cap	Ductile Iron	FCD-450	A536-65-45-12	NOTE.1
	8	Wrench Bolt(S/W)	Alloy Steel	SCM435	A322-4135	
	9	Wrench Bolt(S/W)	Alloy Steel	SCM435	A322-4135	
	10	Radial Ball Bearing	Special Steel	SUJ2	A295-52100	
	11	Spherical Roller Bearing	Special Steel	SUJ2	A295-52100	
	12	Thrust Bearing	Special Steel	SUJ2	A295-52100	
	13	Grease Plug	Steel + Galvanizing			
	14	O-Ring	Silicon			NOTE.4
	15	O-Ring	Silicon			NOTE.4
	16	Collar	Steel Pipe	SGP	A53	
	17	Bearing Washer	Steel			SNAP RING
	18	Bearing Nut	Steel			SNAP RING
	19	Grease Fitting	Steel + Galvanizing			
	20	Set Screw	Stainless Steel			
	21	End Cap Gasket	Non-Asbestos			VALQUA 6601
	22	Base Gasket	Non-Asbestos			VALQUA 6601
	23	Eye Bolt	Steel + Galvanizing			
OPTION	OP-01.	Stem Nut	Bronze	HBsC4	B505-C86300	NOTE. 3
	OP-02.	Hand Wheel	Steel Pipe	SGP	A53	HANDLE PART NOTE. 5
	OP-03.	Key	Carbon Steel	S45C	A576-1045	
	OP-04.	Name Plate	Stainless Steel			
	OP-05.	Washer	Stainless Steel			
	OP-06.	HEX. Bolt (S/W)	Stainless Steel			
	OP-07.	Stem Cover	Steel Pipe	SGP	A53	STEM COVER NOTE.6
	OP-08.	Indicate Bolt	Steel + Galvanizing			
	OP-09.	HEX. Nut	Steel + Galvanizing			
	OP-10.	Indicator	Plastic			

Material Detail : Option and Material Changes >>>

1. All castings are Ductile Iron, FCD-450 (ASTM Class 65-45-12)
2. In case of option for special request, it can be worked Nickel coating, high tensile stainless.
3. Also, the material can be changed as ALBC3(Aluminium Bronze), steel(A576-1045), A439 Gr D2C (Austenitic ductile iron casting), etc.
4. O-Ring Seal & Lubricant : Standard is Silicon & Buna "N", temperature range -20˚C to +120˚C (-4˚F to +248˚F).
   Standard lubricant is Zenith EPSB 2, temperature Range -20˚C to +200˚C (-4˚F to +392˚F).
   Other option are : High Temperature Viton O-Ring Grade V75, Temperature Range -30˚C to +200˚C (-22˚F to +392˚F)
   Lubricant - Zenith SYN WS2 Temperature Range -30˚C~400˚C (-13˚F~752˚F)
   Low Temperature Silicon O-ring, Temperature Range -60˚C to +150˚C (-76˚F to +302˚F)
   Lubricant - Zenith SBLT600, Temperature Range -60˚C~120˚C (-76˚F~248˚F)
5. SAMBO offers a wide variety of Handwheels, Chainwheels, Input Shaft, Locking Devices, etc.
6. SAMBO offers a wide variety of stem cover, stainless steel, polycarbonate.
   Paint : Unless specified, units are supplied with vp134 Red epoxy primer. SAMBO can provide finish coating upon request.

Size and component specification in this catalogue are subject to change without prior notice for quality improvement.
* Mark has been changed and updated.

Spiral Bevel Gear Actuator Assembly

STANDARD TYPE - A

Thrust & Torque Horizontal Input with Single Reduction Gear Attachment

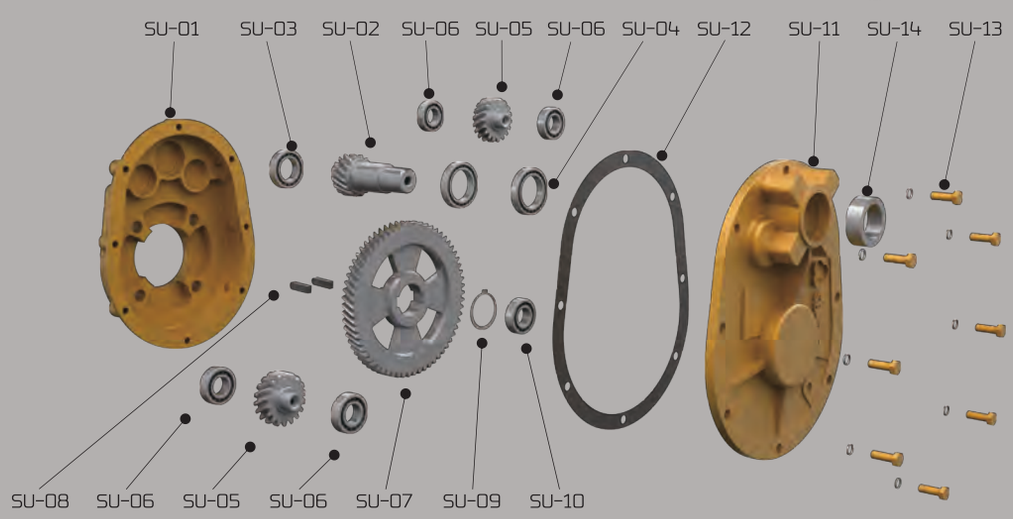

Part List & Material >>>

NO	DESCRIPTION	MATERIAL			REMARK
		NAME	JIS	ASTM	
1	Housing	Ductile Iron	FCD-450	A536-65-45-12	
2	Base	Ductile Iron	FCD-450	A536-65-45-12	
3	Spiral Bevel Gear	Carbon Steel	S45C	A576-1045	
4	Spiral Pinion	Carbon Steel	S45C	A576-1045	
5	Drive Sleeve	Ductile Iron	FCD-450	A536-65-45-12	
6	Dual Lock Nuts	Carbon Steel	S45C	A576-1045	
7	End Cap	Ductile Iron	FCD-450	A536-65-45-12	
8	Wrench Bolt(S/W)	Alloy Steel	SCM435	A322-4135	
9	Wrench Bolt(S/W)	Alloy Steel	SCM435	A322-4135	
10	Radial Ball Bearing	Special Steel	SUJ2	A295-52100	
11	Spherical Roller Bearing	Special Steel	SUJ2	A295-52100	
12	Thrust Bearing	Special Steel	SUJ2	A295-52100	
13	Grease Plug	Steel + Galvanizing			
14	O-Ring	Silicon			
15	O-Ring	Silicon			
16	Collar	Steel Pipe	SGP	A53	
17	Bearing Washer	Steel			
18	Bearing Nut	Steel			
19	Grease Fitting	Steel + Galvanizing			
20	Set Screw	Stainless Stell			
21	End Cap Gasket	Non-Asbestos			VALQUA 6601
22	Base Gasket	Non-Asbestos			VALQUA 6601
23	Eye Bolt	Steel + Galvanizing			

NO	DESCRIPTION	MATERIAL			REMARK
		NAME	JIS	ASTM	
SU-01	Support Housing	Ductile Iron	FCD-450	A536-65-45-12	
SU-02	Helical Pinion	Carbon Steel	S45C	A576-1045	
SU-03	Radial Ball Bearing	Special Steel	SUJ2	A295-52100	
SU-04	Radial Ball Bearing	Special Steel	SUJ2	A295-52100	
SU-05	Idle Gear	Carbon Steel	S45C	A576-1045	
SU-06	Radial Ball Bearing	Speciial Steel	SUJ2	A295-52100	
SU-07	Helical Gear	Carbon Steel	S45C	A576-1045	
SU-08	Key(1R)	Carbon Steel	S45C	A576-1045	
SU-09	Snap ring	Steel			
SU-10	Radial Ball Bearing	Special Steel	SUJ2	A295-52100	
SU-11	Support Cover	Ductile Iron	FCD-450	A536-65-45-12	
SU-12	S-Cover Gasket	Nonasbestos			VALQUA6601
SU-13	Hex.Bolt(S/W)	Alloy Steel	SCM435	A322-4135	
SU-14	Oil-Seal	Buna N	NBR		
OP-01	Stem Nut	Bronze	HBsC4	B505-C86300	
OP-02	Hand Wheel	Steel Pipe	SGP	A53	OPTION HANDLE PART
OP-03	Key(1R)	Carbon Steel	S45C	A576-1045	
OP-04	Name Plate	Stainless Steel			
OP-05	Washer	Stainless Steel			
OP-06	HEX. Bolt (S/W)	Stainless Steel			
OP-07	Stem Cover	Steel Pipe	SGP	A53	OPTION STEM COVER
OP-08	Indicate Bolt	Steel + Galvanizing			
OP-09	HEX. Nut	Steel + Galvanizing			
OP-10	Indicator	Plastic			

Size and component specification in this catalogue are subject to change without prior notice for quality improvement.
* Mark has been changed and updated.

STANDARD TYPE - A

High Load Thrust & Torque Horizontal Input

Part List & Material >>>

NO	DESCRIPTION	MATERIAL			REMARK
		NAME	JIS	ASTM	
1	Housing	Ductile Iron	FCD–450	A536–65–45–12	
2	Thrust Base	Ductile Iron	FCD–450	A536–65–45–12	
3	Spiral Bevel Gear	Carbon Steel	S45C	A576–1045	
4	Spiral Pinion	Carbon Steel	S45C	A576–1045	
5	Drive Sleeve	Ductile Iron	FCD–450	A536–65–45–12	
6	Grease Plug	Steel + Galvanizing			
7	End Cap	Ductile Iron	FCD–450	A536–65–45–12	
8	Wrench Bolt(S/W)	Alloy Steel	SCM435	A322–4135	
9	Wrench Bolt	Alloy Steel	SCM435	A322–4135	
10	Radial Ball Bearing	Special Steel	SUJ2	A295–52100	
11	Spherical Roller Bearing	Special Steel	SUJ2	A295–52100	
12	Thrust all Bearing	Special Steel	SUJ2	A295–52100	
13	Grease Plug	Steel + Galvanizing			
14	O–Ring	Silicon			
15	O–Ring	Silicon			
16	Collar	Steel Pipe	SGP	A53	
17	Bearing Washer	Steel			
18	Bearing Nut	Steel			
19	Grease Fitting	Steel + Galvanizing			

NO	DESCRIPTION	MATERIAL			REMARK
		NAME	JIS	ASTM	
20	Set Screw	Stainless Steel			
21	End Cap Gasket	Non–Asbestops			VALQUA 6601
22	Base Gasket	Non–Asbestops			VALQUA 6601
23	Eye Bolt	Steel + Galvanizing			
24	Thrust Housing	Ductile Iron	FCD–450	A536–65–45–12	
25	Thrust Gasket	Non–Asbestos			VALQUA 6601
26	Wrench Bolt (S/W)	Alloy Steel	SCM435	A322–4135	
27	SR. Thrust Bearing	Special Steel	SUJ2	A295–52100	
OP–01	Stem Nut	Bronze	HBsC4	B505–C86300	
OP–02	Hand Wheel	Steel Pipe	SGP	A53	OPTION HANDLE PART
OP–03	Key(1R)	Carbon Steel	S45C	A576–1045	
OP–04	Name Plate	Stainless Steel			
OP–05	Washer	Stainless Steel			
OP–06	HEX. Bolt (S/W)	Stainless Steel			
OP–07	Stem Cover	Steel Pipe	SGP	A53	OPTION STEM COVER
OP–08	Indicate Bolt	Steel + Galvanizing			
OP–09	HEX. Nut	Steel + Galvanizing			
OP–10	Indicator	Plastic			

Size and component specification in this catalogue are subject to change without prior notice for quality improvement.
* Mark has been changed and updated.

SAMBO

INDEX

Size and component specification in this catalogue are subject to change without prior notice for quality improvement.
* Mark has been changed and updated.

PRODUCTS

Global Leader
SAMBO
GEAR ACTUATORS for Industrial Valves

The World's Highest Quality!

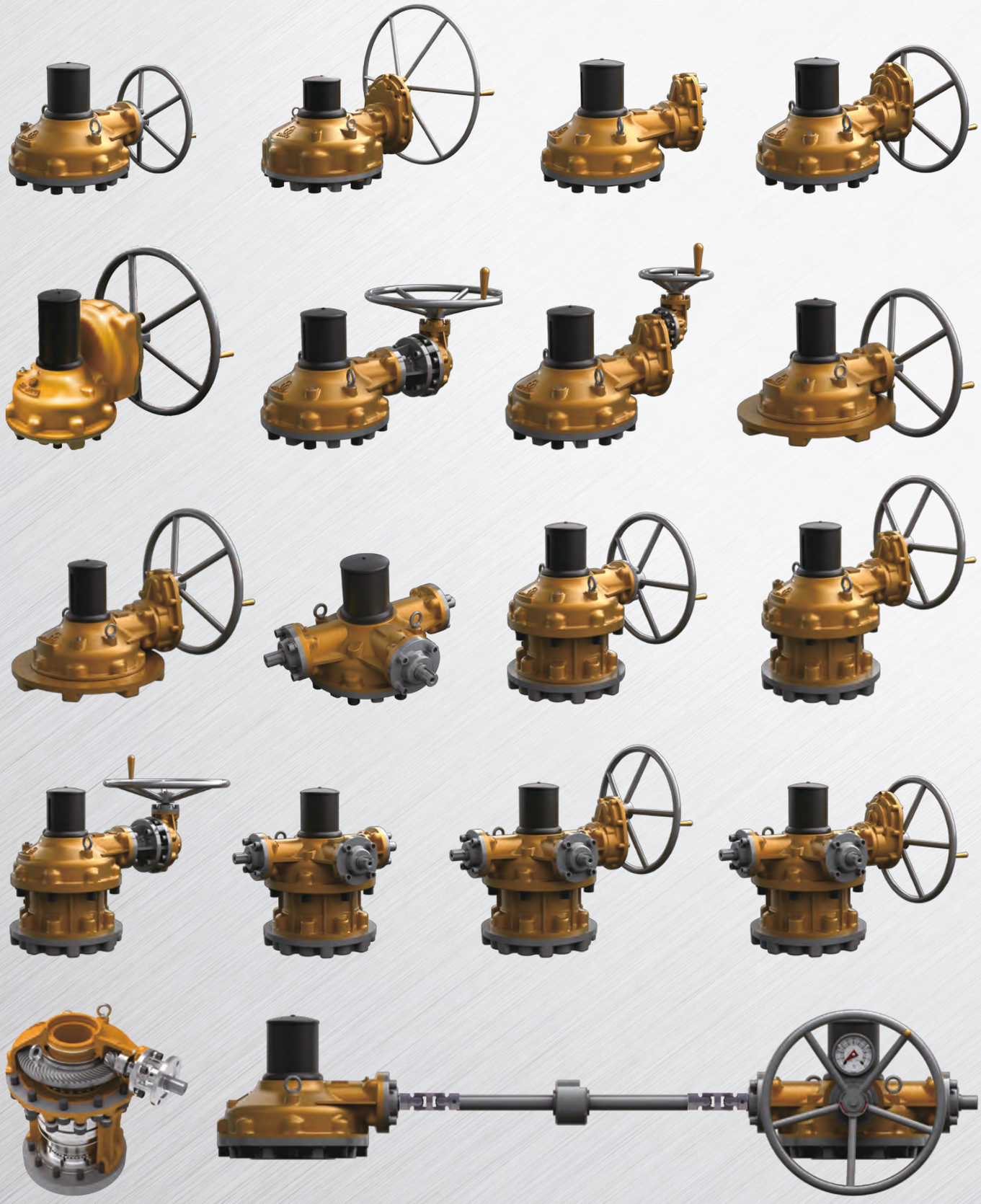

Size and component specification in this catalogue are subject to change without prior notice for quality improvement.
* Mark has been changed and updated.

Hand Wheel Type

Standard Handwheel : Gate Valve >>>

UNIT : mm

SIZE / MODEL	ΦO.D	ΦD	ΦD&KEY	L	L1	ARM Q'TY
BH–250	250	60	Φ26 (8X7)	35	70	4EA
BH–300	300					
BH–400	400	70	Φ32 (10X8)	35	90	5EA
BH–500	500					
BH–630	630				110	
BH–710	710					
BH–800	800	80	Φ38 (12X8)	45	130	6EA
BH–900	900					
BH–1000	1000	90	Φ50 (16X10)	59		

If there is no request from customers, we will make handwheel as per the above table.
As option, the material can be changed and Handwheel size can be suitable for all models.

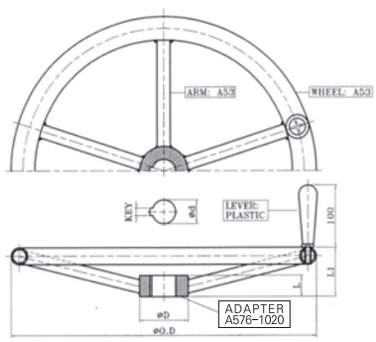

SOLID HANDWHEEL >>>

UNIT : mm

SIZE / MODEL	ΦO.D	ΦD	ΦD&KEY	L	L1	ARM Q'TY
BSH–250	250	60	Φ26 (8X7)	35	70	4EA
BSH–300	300					
BSH–400	400	70	Φ32 (10X8)	35	90	5EA
BSH–500	500					
BSH–630	630				110	
BSH–710	710					
BSH–800	800	80	Φ38 (12X8)	45	130	6EA
BSH–900	900					
BSH–1000	1000	90	Φ50 (16X10)	59		

If there is no request from customers, we will make handwheel as per the above table.
As option, the material can be changed and Handwheel size can be suitable for all models.

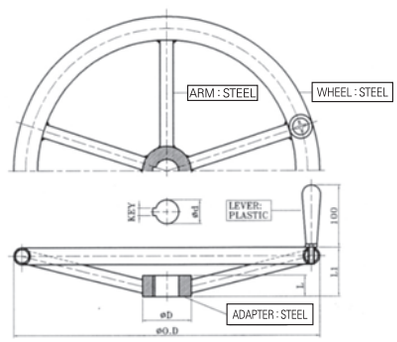

Round Bar Handwheel : Globe Valve >>>

UNIT : mm

SIZE / MODEL	ΦO.D	ΦD	ΦD&KEY	L	L1	ARM Q'TY
BRH–250	250	80	Φ26 (8X7)	35	55	4EA
BRH–300	300					
BRH–400	400	100	Φ32 (10X8)	35	60	5EA
BRH–500	500					
BRH–630	630				65	
BRH–710	710					
BRH–800	800	120	Φ38 (12X8)	45	70	6EA
BRH–900	900					
BRH–1000	1000	140	Φ50 (16X10)	59		

All material of round bar handwheel are made by carbon steel and it is used for required momentary impact to be suitable glove valve.

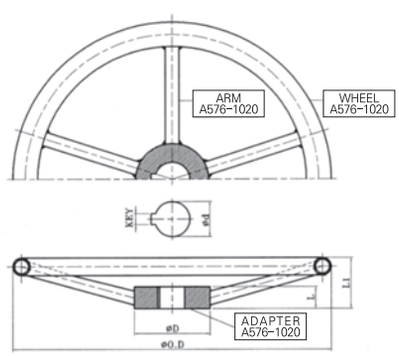

2" SQUARE NUT Handwheel >>>

UNIT : mm

SIZE / MODEL	ΦO.D	ΦD	ΦD&KEY	L	L1	ARM Q'TY
BDNH–250	250	90	Φ26 (8X7)	35	70	4EA
BDNH–300	300					
BDNH–400	400		Φ32 (10X8)		90	5EA
BDNH–500	500					
BDNH–630	630				110	
BDNH–710	710					
BDNH–800	800		Φ38 (12X8)		130	6EA
BDNH–900	900					
BDNH–1000	1000		Φ50 (16X10)	70		

This Handwheel is the type using air impact wrench and it can be made properly according to customer' s request.

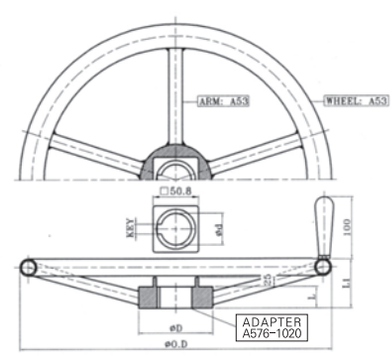

Size and component specification in this catalogue are subject to change without prior notice for quality improvement.
* Mark has been changed and updated.

Chain Wheel Type

Spiral Bevel Standard >>>

UNIT : mm

SIZE / MODEL	A	B	ΦD & KEY
CH-200	200	43	Φ16 (6X6) Φ21 (6X6)
CH-250	250		
CH-300	300	43.5	Φ26 (8X7) Φ32 (10X8)
CH-350	350		
CH-400	400	50	Φ38 (12X8)
CH-450	450		
CH-500	500		
CH-550	550		
CH-600	600		
CH-700	700	51.5	Φ38 (12X8) Φ50 (16X10)
CH-800	800	53	

Gear Type >>>

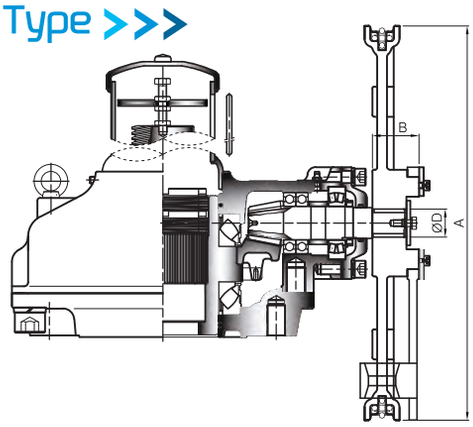

Hammer Type >>>

Chainwheel has 2 types

- First, hammer type which is joined with handwheel.
- Second, gear type which is adhered to gear directly.
- material : sprocket rim (FCD450), guide arm (A576-1045), chain (steel+zn)

Global Leader
SAMBO
SPIRAL BEVEL GEAR ACTUATORS

The World's Highest Quality!

Handwheel Selection Chart >>>

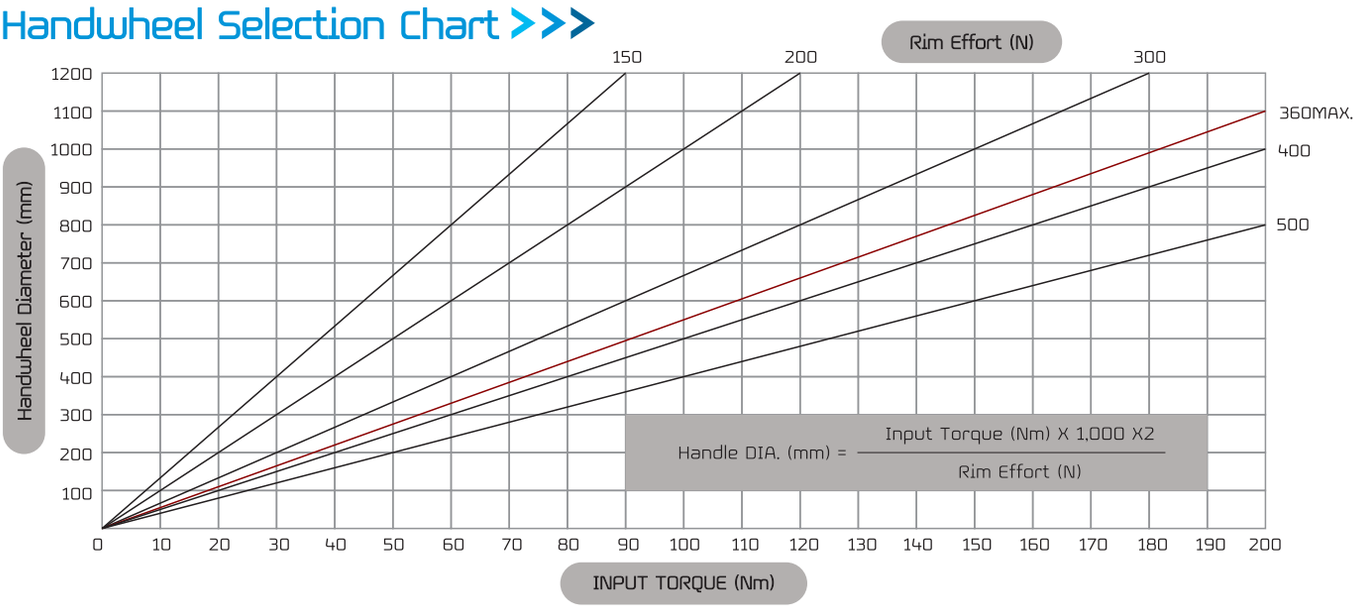

Size and component specification in this catalogue are subject to change without prior notice for quality improvement.
* Mark has been changed and updated.

M·O·V Type

Selection Chart for Electric Actuator Dimension

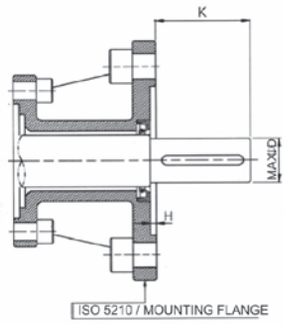

Spiral Bevel Gear Actuator >>>

Standard Type							
NO / MODEL	Flange Type						Max.ΦD & Key
	F–10,F–14,F–16		F–25,F–30		F–35,F–40		
	K	H	K	H	K	H	
SB–VS10	70	6	90	8	110	10	Φ30 (10X8)
SB–VS20							
SB–V0							Φ35 (10X8)
SB–V1							
SB–V2							Φ40 (12X8)
SB–V3							
SB–V35							Φ45 (14X9)
SB–V4							
SB–V5							
SB–V55							
SB–V6							Φ55 (16X10)
SB–V7							
SB–V75							Φ65 (18X11)
SB–V8							
SB–V85							Φ65 (18X11)
SB–V9							Φ 80 (22X14)
SB–V10							Φ 90 (25X14)

Support Type					
NO / MODEL	Flange Type				Max.ΦD & Key
	F–10,F–14,F–16		F–25,F–30		
	K	H	K	H	
SB–V0–1S,1SD	70	6	90	8	Φ30 (10X8)
SB–V1–1S,1SD					
SB–V2–1S,1SD					Φ30 (10X8)
SB–V3–1S,1SD					
SB–V35–1S,1SD					Φ35 (10X8)
SB–V4–1S,1SD					
SB–V5–1S,1SD					Φ40 (12X8)
SB–V55–1S,1SD					
SB–V6–1S,1SD					Φ45 (14X9)
SB–V7–1S,1SD					
SB–V75–1S,1SD					Φ55 (16X10)
SB–V8–1S,1SD					
SB–V85–1S,1SD					
SB–V9–1S,1SD					Φ70 (18X11)
SB–V10–1S,1SD					

Worm Gear Actuator >>>

Standard Type							
NO / MODEL	Flange Type						Max.ΦD & Key
	F–10,F–14,F–16		F–25,F–30		F–35,F–40		
	K	H	K	H	K	H	
SBWG–BF	70	6	90	8	110	10	Φ20 (6X6)
SBWG–0							
SBWG–00							Φ25 (8X7)
SBWG–01							
SBWG–02							Φ35 (10X8)
SBWG–03							
SBWG–35							
SBWG–04							Φ45 (14X9)
SBWG–05							
SBWG–55							
SBWG–06							Φ55 (16X10)
SBWG–07							
SBWG–75							Φ70 (18X11)
SBWG–08							
SBWG–09							
SBWG–10							Φ90 (25X14)
SBWG–11							
SBWG–12							Φ120 (32X18)
SBWG–13							

Support Type					
NO / MODEL	Flange Type				Max.ΦD & Key
	F–10,F–14,F–16		F–25,F–30		
	K	H	K	H	
SBWG–00–1S,1SD	70	6	90	8	Φ25 (8X7)
SBWG–01–1S,1SD					
SBWG–02–1S,1SD					Φ30 (10X8)
SBWG–03–1S,1SD					
SBWG–35–1S,1SD					
SBWG–04–1S,1SD					Φ35 (10X8)
SBWG–05–1S,1SD					
SBWG–55–1S,1SD					
SBWG–06–1S,1SD					Φ45 (14X9)
SBWG–07–1S,1SD					
SBWG–75–1S,1SD					Φ55 (16X10)
SBWG–08–1S,1SD					
SBWG–09–1S,1SD					
SBWG–10–1S,1SD					Φ70 (18X11)
SBWG–11–1S,1SD					
SBWG–12–1S,1SD					Φ70 (18X11)
SBWG–13–1S,1SD					

Size and component specification in this catalogue are subject to change without prior notice for quality improvement.
* Mark has been changed and updated.

Flange Dimensions

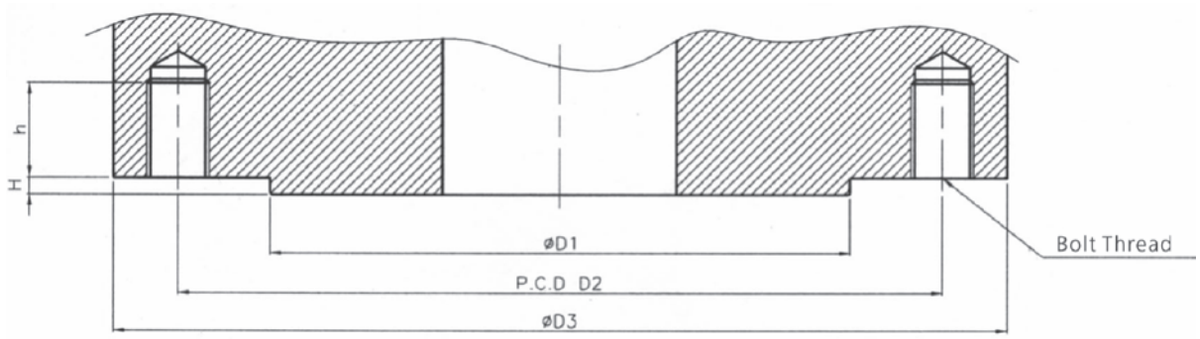

FLANGE TYPE	ISO 5210/1 MOUNTING FLANGE							
	ØD1	P.C.D D2	Ø D3	H MAX.	Bolt Thread		h (Tap Dp MIN.)	NO. of Screws
F–05	35	50	65	3	M6	1/4"–20UNC	9	4
F–07	55	70	90		M8	5/16"–18UNC	12	
F–10	70	102	125		M10	3/8"–16UNC	15	
F–12	85	125	150		M12	1/2"–13UNC	18	
F–14	100	140	175	4	M16	5/8"–11UNC	24	
F–16	130	165	210	5	M20	3/4"–10UNC	30	
F–25	200	254	300		M16	5/8"–11UNC	24	8
F–30	230	298	350		M20	3/4"–10UNC	30	
F–35	260	356	415		M30	1"–8UNC	45	
F–40	300	406	475	8	M36	1 1/4"–7UNC	54	
F–48	370	483	560		M36	1 1/4"–7UNC	54	12
F–60	470	603	686		M36	1 1/4"–7UNC	54	20
F–80	670	813	900	10	M42	1 1/2"–6UNC	63	20
F–100	870	1042	1200		M42	1 1/2"–6UNC	63	32

Position of Holes

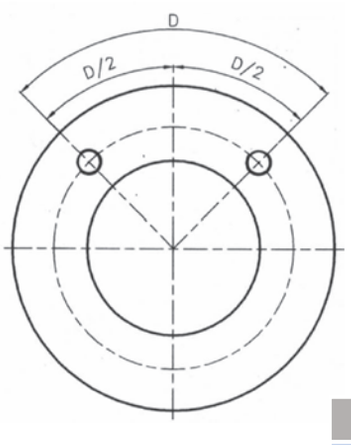

Global Leader
SAMBO
SPIRAL BEVEL GEAR ACTUATORS

The World's Highest Quality!

FLANGE TYPE	NO. of Screws	D/2
F–05 to F–16	4	45°
F–25 to F–40	8	22.5°
F–48	12	15°
F–60, F–80	20	9°
F–100	32	5.625°

Size and component specification in this catalogue are subject to change without prior notice for quality improvement.
* Mark has been changed and updated.

The SB Series Spiral Bevel Gears have the ability to be assembled with "Lost-Motion-[Hammer blow]" or with "No-Lost Motion" output drive arrangement

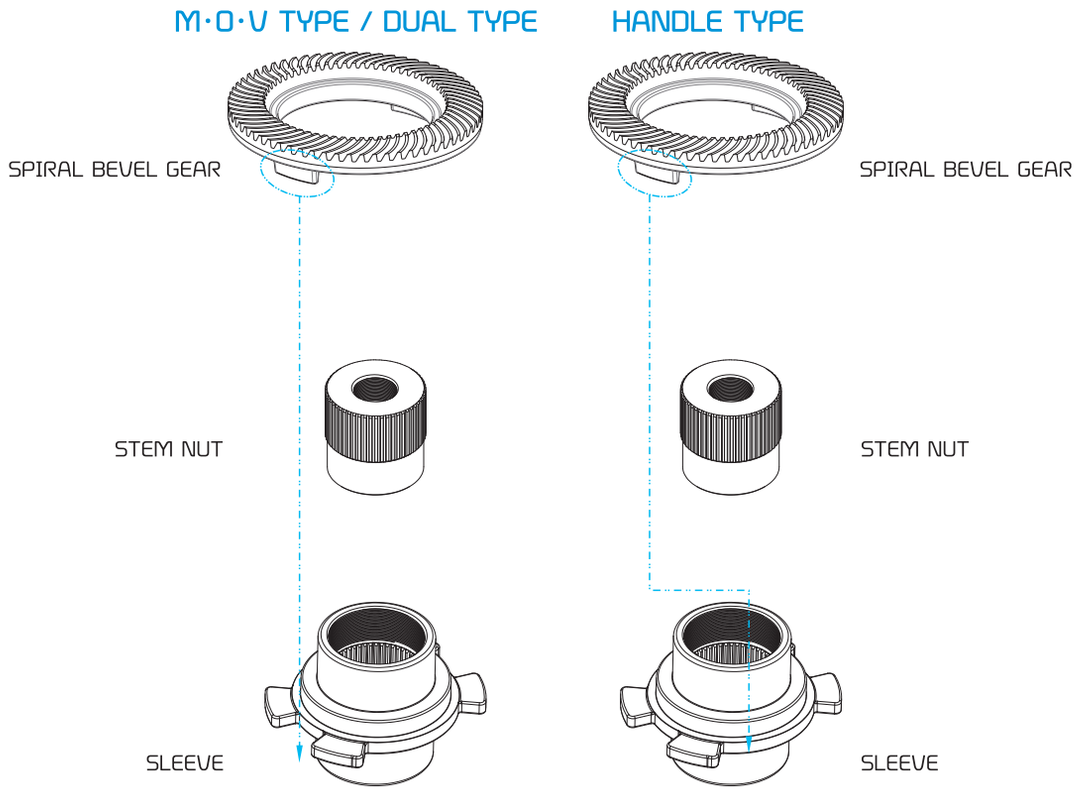

Fix Type (M·O·V/Dual) >>>

No-Lost Motion

This type eliminates the gap in the lug drive between the Spiral Bevel Gear and Drive Sleeve.
It is the preferred method for Electric Actuators having positioning control capability.

Hammer Blow Type (Handle) >>>

Lost Motion

This type eliminates the gap in the lug drive between the Spiral Bevel Gear and Drive Sleeve enabling a momentary impact.
It is the preferred method for all Manual operation and for Electric Actuators of Wedge Gates and Globe Valves.

Size and component specification in this catalogue are subject to change without prior notice for quality improvement.
* Mark has been changed and updated.

ETC

Twin Shaft Gear Actuators Type >>>

There are two input shafts in the below support box type. One shaft is for high speed and the other shaft is for low speed.

-1ST TYPE

Second Input Shaft (Low Speed Input Shaft)

Provides maximum mechanical advantage for seating and unseating of valves.

Primary Input Shaft (High Speed Input Shaft)

Allow for less turns after valve has been unseating.

Manual Both Ends >>>

The below input shaft type is used to require Gear Actuators which is operated by 2 spindles.
As option, there are motorized type, dial type and manual type.

Manual · Motorised >>>

Valve Spindle Cover Tubes >>>

Stem cover for valve can be offered as A53, SUS304, polycarbonate and etc. Stem cover and indicator sets can be made by several different types. The length of stem cover will be changed as per customer' s request.

A TYPE
Rising Indicators

B TYPE
No Hole Stem Cover

C TYPE
Gauge

D TYPE
Polycarbonate (Transparent)

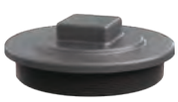

E TYPE
Stem Cap

F TYPE
PF Adapter

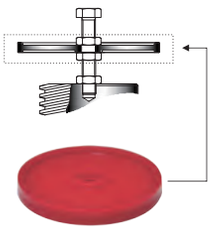

INDICATOR

The Other Used Options in SAMBO >>>

Sambo' s standard input shaft rotation is based on a clockwise input resulting in a clockwise output (Clockwise In = Clockwise Out). The reverse rotation can be operated. As per customer' s request, it can be made by such types as buried, submersible, marine, radiation and high & low temperature service and etc. Also, Gear ratio and specification of flange can be changed.

Size and component specification in this catalogue are subject to change without prior notice for quality improvement.
* Mark has been changed and updated.

SAMBO

STANDARD TYPE-A

Thrust & Torque Horizontal Input

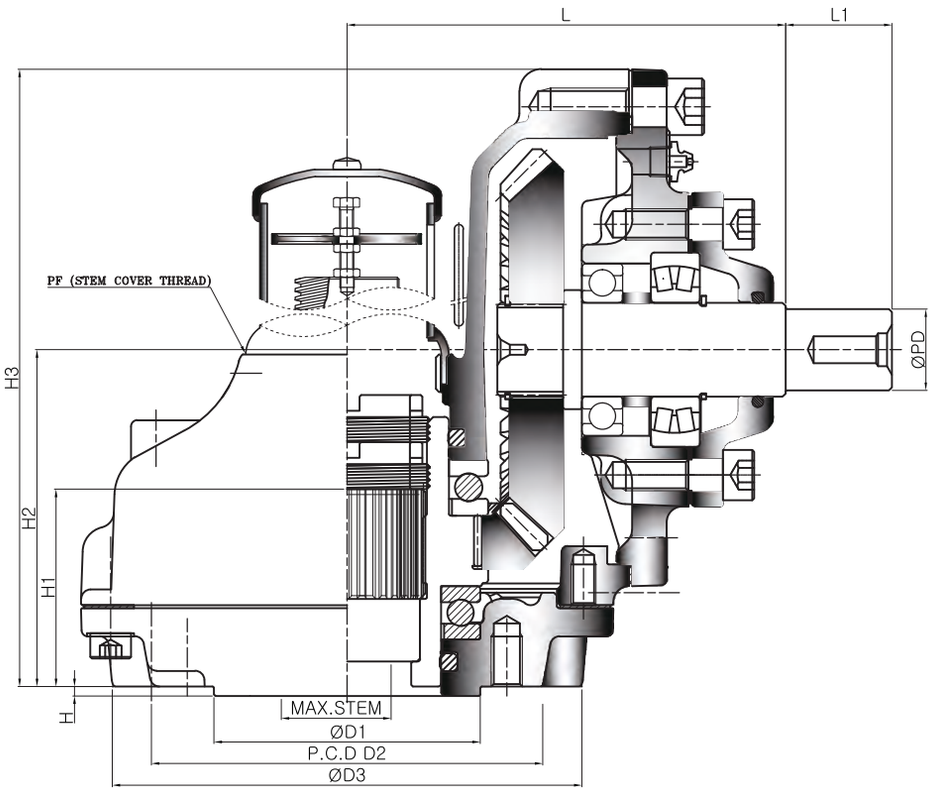

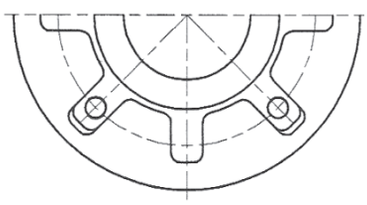

TYPE - A

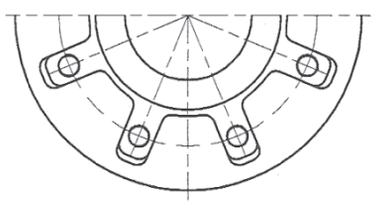

TYPE - B

Dimension >>>

UNIT : mm

DIM / MODEL	BASE PART							EXTERNAL PART				INPUT SHAFT PART			HAND WHEEL	STEM COVER
	TYPE	FLANGE	ØD1	P.C.D ØD2	P.C.D N-H-DP	ØD3	H	H1	H2	H3	L	L1	ØPD	KEY		
SB-MT-VS10	A	F-10	70	102	4-M10-15	125	3	56	102.5	179	129	34	26	8X7	250	PF2"
SB-MT-VS20		F-12	85	125	4-M12-18	150		63	107.5	197	140				300	
SB-MT-V0		F-14	100	140	4-M16-24	175		72	130	231	166.5	34	32	10X8	400	PF2-1/2"
SB-MT-V1		F-16	130	165	4-M20-30	210		84	157	275	181				500	PF3"
SB-MT-V2	B	F-16 (F-20)	140	205	8-M16-24	250	3	95	185	311	204	34	32	10X8	630	PF3-1/2"
SB-MT-V3		F-25	200	254	8-M16-24	300		102	211	361	227				710	PF4"
SB-MT-V35		F-30	230	298	8-M20-30	350		122	250	413	286	44	38	12X8	800	PF5"
SB-MT-V4		F-35	260	356	8-M30-45	410		133	285	476	313				900	PF6"
SB-MT-V5		F-40	300	406	8-M36-55	475		161	324.5	540	337					
SB-MT-V55		F-40	300	406	8-M36-55	475		171	358	586	358					
SB-MT-V6		F-40	300	406	8-M36-55	475		185	387	649	409	58	50	16X10	1000	PF8"

Size and component specification in this catalogue are subject to change without prior notice for quality improvement.
* Mark has been changed and updated.

Feature >>>

- This series suitable for use with Gate & Globe type valve.
  Also sluice gates and any other type requiring linear motion for thrust and torque applications.
- Unique Top Entry Replaceable Stem Nut. High Tensile Aluminum bronze material providing corrosion and abrasion resistance.
- Castings are Ductile Iron, class 65-45-12 providing high strength and impact resistance.
- Heavy duty roller bearings supporting both radial & axial thrust loads.
- Gears are Machine cut, heat treated and ground for optimum operation Units are completely O-Ring Sealed suitable for temporary submergence to meet Ip67 class.
- Many options, such as hand wheels, chain wheels, stem covers, position dial indicators are available.

DIAL INDICATOR

A unique local position dial indicator is available.
It is graduated in percent from 0% (close) to 100% (open).

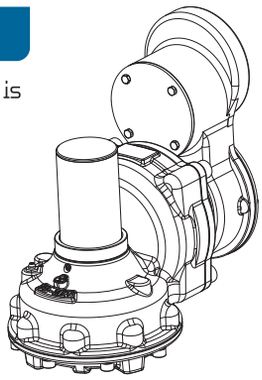

M·O·V OPTION

Bevel Gear can be provided with Motor actuator input flanges to accept standard ISO Mounting Base.

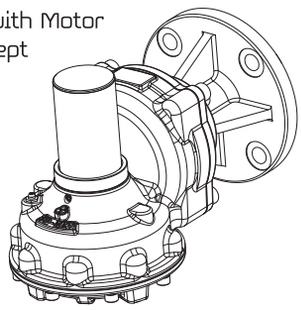

Global Leader
SAMBO
GEAR ACTUATORS for Industrial Valves

The World's Highest Quality!

Selection Chart for Manual Operation >>>

SIZE / MODEL	GEAR RATIO	MAX. STEM ACCEPTANCE		BASE MOUNTING OPTION & STANDARD	MAX. THRUST CAPACITY		MAX. TORQUE CAPACITY		WEIGHT
		TW	KEY		KN	lbf	N–m	Ft . lbf	Kg
SB–MT–VS10	1 : 1	30	22 (8X7)	F–07, F–10	75.5	16970	220	162	10
SB–MT–VS20	1 : 1	40	32 (10X8)	F–10, F–12	113	25400	370	273	14
SB–MT–V0	1 : 1	46	38 (12X8)	F–12, F–14	127	28550	600	442	21
SB–MT–V1	1 : 1	55	45 (14X9)	F–14, F–16	141	31700	980	723	29
SB–MT–V2	1 : 1	62	52 (16X10)	F–16, (F–20)	190	42710	1500	1106	45
SB–MT–V3	1 : 1	72	60 (18X11)	(F–20), F–25	288	64750	2500	1844	59
SB–MT–V35	1 : 1	85	72 (20X12)	F–25, F–30	350	78680	3500	2581	102
SB–MT–V4	1 : 1	98	84 (22X14)	F–30, F–35	400	89920	5200	3835	129
SB–MT–V5	1 : 1	110	95 (28X16)	F–25, F–30, F–35, F–40	510	114650	7800	5753	200
SB–MT–V55	1 : 1	120	105 (28X16)	F–30, F–35, F–40	1500	337210	10400	7671	254
SB–MT–V6	1 : 1	130	115 (32X18)	F–30, F–35, F–40	2310	519300	13000	9588	310

Size and component specification in this catalogue are subject to change without prior notice for quality improvement.
* Mark has been changed and updated.

STANDARD TYPE-A

Thrust & Torque Horizontal Input

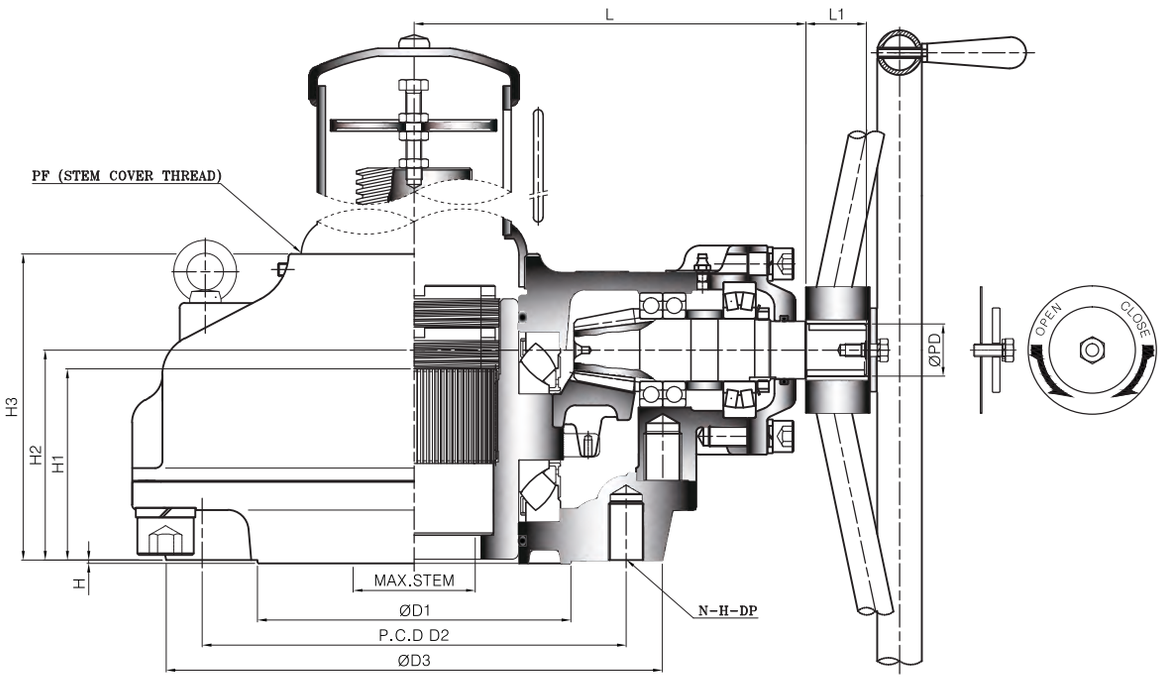

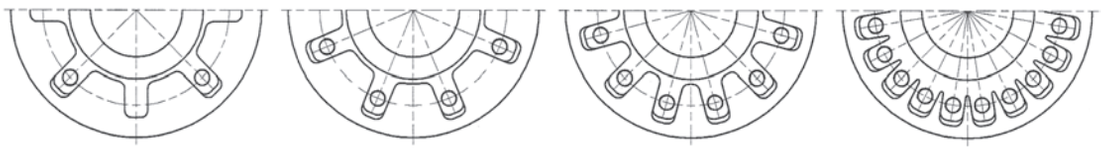

TYPE - A TYPE - B TYPE - C TYPE - D

Dimension >>>

UNIT : mm

DIM / MODEL	BASE PART							EXTERNAL PART				INPUT SHAFT PART			HAND WHEEL	STEM COVER
	TYPE	FLANGE	ØD1	P.C.D ØD2	P.C.D N-H-DP	ØD3	H	H1	H2	H3	L	L1	ØPD	KEY		
* SB-SP-VS10	A	F-10	70	102	4-M10-15	125	3	56	71	95	121	34	26	8X7	250	PF2"
* SB-SP-VS20		F-12	85	125	4-M12-18	150		63	78.5	106	131				300	PF2-1/2"
* SB-SP-V0		F-14	100	140	4-M16-24	175		72	81	121	154.5	34	32	10X8	400	
* SB-SP-V1		F-16	130	165	4-M20-30	210		84	98	140	167				500	PF3"
* SB-SP-V2	B	F-16 (F-20)	140	205	8-M16-24	250	3	95	115	159.5	188	34	32	10X8	630	PF3-1/2"
* SB-SP-V3		F-25	200	254	8-M16-24	300		102	119	166.5	208				710	PF4"
* SB-SP-V35		F-30	230	298	8-M20-30	350		122	138	195	266	44	38	12X8	800	PF5"
* SB-SP-V4		F-35	260	356	8-M30-45	410		133	150	209	291				900	PF6"
* SB-SP-V5		F-40	300	406	8-M36-55	475		161	177	245	313					
* SB-SP-V55		F-40	300	406	8-M36-55	475		171	192	261	333					
* SB-SP-V6		F-40	300	406	8-M36-55	475		185	201	283	381	58	50	16X10	1000	PF8"

Size and component specification in this catalogue are subject to change without prior notice for quality improvement.
* Mark has been changed and updated.

Feature >>>

- This series suitable for use with Gate & Globe type valve. Also sluice gates and any other type requiring linear motion for thrust and torque applications.
- Unique Top Entry Replaceable Stem Nut. High Tensile Aluminum bronze material providing corrosion and abrasion resistance.
- Castings are Ductile Iron, class 65-45-12 providing high strength and impact resistance.
- Heavy duty roller bearings supporting both radial & axial thrust loads.
- Gears are Machine cut, heat treated and ground for optimum operation Units are completely O-Ring Sealed suitable for temporary submergence to meet Ip67 class.
- Many options, such as hand wheels, chain wheels, stem covers, position dial indicators are available.

DIAL INDICATOR

A unique local position dial indicator is available.
It is graduated in percent from 0% (close) to 100% (open).

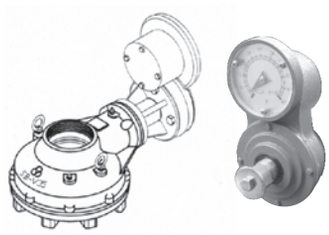

M·O·V OPTION

Bevel Gear can be provided with Motor actuator input flanges to accept standard ISO Mounting Base.

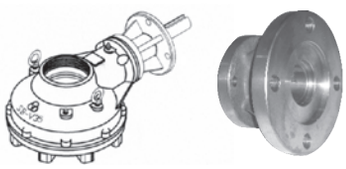

LOCKING DEVICE OPTION

Input can be equipped with a Handwheel locking device for Manually operated units.

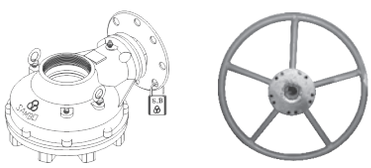

SAMBO The World's Highest Quality!

Global Leader
SAMBO
SPIRAL BEVEL GEAR ACTUATORS

The World's Highest Quality!

Selection Chart for Manual Operation >>>

SIZE / MODEL	GEAR RATIO	MAX.STEM ACCEPTANCE		BASE MOUNTING OPTION & STANDARD	MAX. THRUST CAPACITY		MAX. TORQUE CAPACITY		WEIGHT
		TW	KEY		KN	lbf	N–m	Ft . lbf	Kg
* SB–SP–VS10	2 : 1	30	22 (8X7)	F–07, F–10	75.5	16970	220	162	8
* SB–SP–VS20	2 : 1	40	32 (10X8)	F–10, F–12	113	25400	370	273	11
* SB–SP–V0	2 : 1	46	38 (12X8)	F–10, F–12, F–14	127	28550	600	442	16
* SB–SP–V1	2 & 4 : 1	55	45 (14X9)	F–14, F–16	141	31700	980	723	22
* SB–SP–V2	3 & 5 : 1	62	52 (16X10)	F–14, F–16, (F–20)	190	42710	1500	1106	34
* SB–SP–V3	4 & 6 : 1	72	60 (18X11)	F–16, (F–20), F–25	288	64750	2500	1844	45
* SB–SP–V35	4 & 6 : 1	85	72 (20X12)	F–25, F–30	350	78680	3500	2581	78
* SB–SP–V4	5 & 8 : 1	98	84 (22X14)	F–25, F–30, F–35	400	89920	5200	3835	99
* SB–SP–V5	5 & 8 : 1	110	95 (28X16)	F–25, F–30, F–35, F–40	510	114650	7800	5753	150
* SB–SP–V55	6 & 8 : 1	120	105 (28X16)	F–30, F–35, F–40	1500	337210	10400	7671	201
* SB–SP–V6	6 & 8 : 1	130	115 (32X18)	F–30, F–35, F–40	2310	519300	13000	9588	253

Size and component specification in this catalogue are subject to change without prior notice for quality improvement.
* Mark has been changed and updated.

SAMBO

STANDARD TYPE-A

Thrust & Torque Horizontal Input

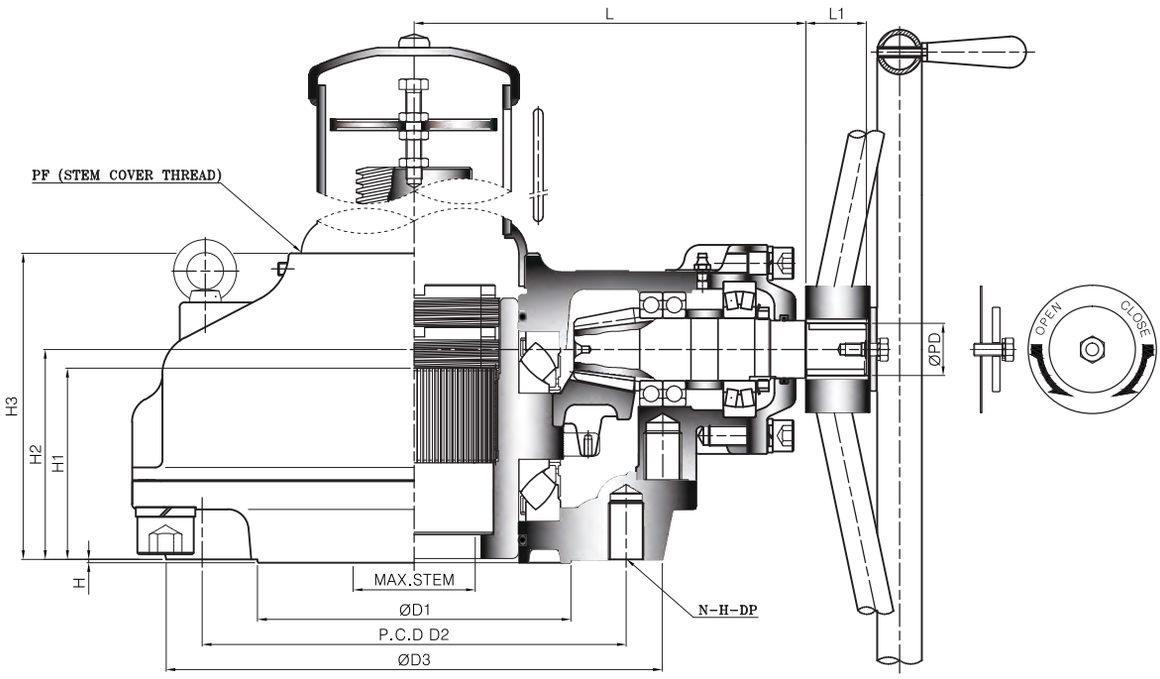

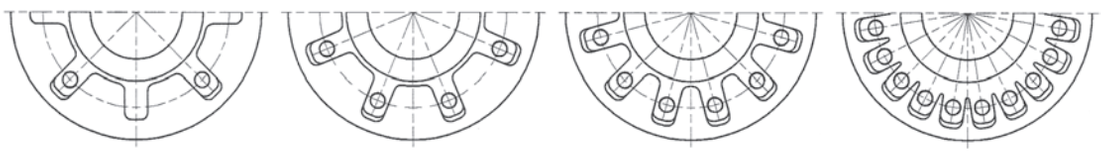

TYPE - A TYPE - B TYPE - C TYPE - D

Dimension >>>

UNIT : mm

DIM / MODEL	BASE PART							EXTERNAL PART				INPUT SHAFT PART			HAND WHEEL	STEM COVER
	TYPE	FLANGE	ØD1	P.C.D ØD2	P.C.D N-H-DP	ØD3	H	H1	H2	H3	L	L1	ØPD	KEY		
SB-VS10	A	F-10	70	102	4-M10-15	125	3	56	71	95	121	34	26	8X7	250	PF2"
SB-VS20		F-12	85	125	4-M12-18	150		63	78.5	106	131				300	PF2-1/2"
SB-V0		F-14	100	140	4-M16-24	175		72	81	121	154.5	34	32	10X8	400	
SB-V1		F-16	130	165	4-M20-30	210		84	98	140	167				500	PF3"
SB-V2	B	F-16 (F-20)	140	205	8-M16-24	250	3	95	115	159.5	188	34	32	10X8	630	PF3-1/2"
SB-V3		F-25	200	254	8-M16-24	300		102	119	166.5	208				710	PF4"
SB-V35		F-30	230	298	8-M20-30	350		122	138	195	266	44	38	12X8	800	PF5"
SB-V4		F-35	260	356	8-M30-45	410		133	150	209	291				900	PF6"
SB-V5		F-40	300	406	8-M36-55	475		161	177	245	313					
SB-V55		F-40	300	406	8-M36-55	475		171	192	261	333					
SB-V6		F-40	300	406	8-M36-55	475		185	201	283	381	58	50	16X10	1000	PF8"
SB-V7	C	F-48	370	483	12-M36-55	560	5	206	222	309	409	58	50	16X10	1000	PF8"
SB-V75		F-48	370	483	12-M36-55	560		221	248	340	441	58	50	16X10	1000	PF10"
SB-V8		F-48	370	483	12-M36-55	560		233	259	352	472					
SB-V85	D	F-60	470	603	20-M36-55	700	5	248	278	373	525	58	50	16X10	1000	PF12"
SB-V9		F-60	470	603	20-M36-55	700		263	295	398	591	58	50	16X10	1000	PF12"
* SB-V10		F-80	670	813	20-M42-63	900		378	375	490	664					

Size and component specification in this catalogue are subject to change without prior notice for quality improvement.
* Mark has been changed and updated.

Feature >>>

- This series suitable for use with Gate & Globe type valve. Also sluice gates and any other type requiring linear motion for thrust and torque applications.
- Unique Top Entry Replaceable Stem Nut. High Tensile Aluminum bronze material providing corrosion and abrasion resistance.
- Castings are Ductile Iron, class 65-45-12 providing high strength and impact resistance.
- Heavy duty roller bearings supporting both radial & axial thrust loads.
- Gears are Machine cut, heat treated and ground for optimum operation Units are completely O-Ring Sealed suitable for temporary submergence to meet Ip67 class.
- Many options, such as hand wheels, chain wheels, stem covers, position dial indicators are available.

DIAL INDICATOR

A unique local position dial indicator is available.
It is graduated in percent from 0% (close) to 100% (open).

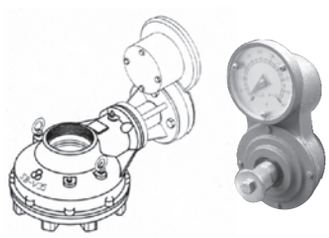

M·O·V OPTION

Bevel Gear can be provided with Motor actuator input flanges to accept standard ISO Mounting Base.

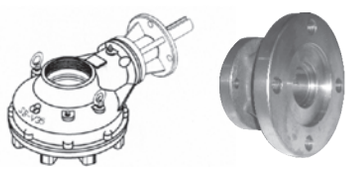

LOCKING DEVICE OPTION

Input can be equipped with a Handwheel locking device for Manually operated units.

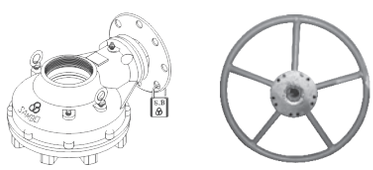

Selection Chart for Manual Operation >>>

SIZE / MODEL	GEAR RATIO	MAX.STEM ACCEPTANCE		BASE MOUNTING OPTION & STANDARD	MAX. THRUST CAPACITY		MAX. TORQUE CAPACITY		WEIGHT
		TW	KEY		KN	lbf	N–m	Ft . lbf	Kg
SB–VS10	2.5 : 1	30	22 (8X7)	F–07, F–10	75.5	16970	220	162	8
SB–VS20	3 : 1	40	32 (10X8)	F–10, F–12	113	25400	370	273	11
SB–V0	3.25 : 1	46	38 (12X8)	F–10, F–12, F–14	127	28550	600	442	16
SB–V1	3.5 : 1	55	45 (14X9)	F–14, F–16	141	31700	980	723	22
SB–V2	4 : 1	62	52 (16X10)	F–14, F–16, (F–20)	190	42710	1500	1106	34
SB–V3	5 : 1	72	60 (18X11)	F–16, (F–20), F–25	288	64750	2500	1844	45
SB–V35	5.5 : 1	85	72 (20X12)	F–25, F–30	350	78680	3500	2581	78
SB–V4	6 : 1	98	84 (22X14)	F–25, F–30, F–35	400	89920	5200	3835	99
SB–V5	6.56 : 1	110	95 (28X16)	F–25, F–30, F–35, F–40	510	114650	7800	5753	150
SB–V55	7 : 1	120	105 (28X16)	F–30, F–35, F–40	1500	337210	10400	7671	201
SB–V6	7 : 1	130	115 (32X18)	F–30, F–35, F–40	2310	519300	13000	9588	253
SB–V7	7.56 : 1	150	130 (36X20)	F–35, F–40, F–48	2500	562020	17600	12981	318
SB–V75	8 : 1	160	140 (36X20)	F–40, F–48	3450	775590	21000	15489	460
SB–V8	8 : 1	180	160 (40X22)	F–40, F–48	4100	921700	32000	23602	473
SB–V85	8 : 1	190	170 (40X22)	F–48, F–60	5150	1157760	40000	29502	797
SB–V9	8 : 1	200	180 (45X25)	F–48, F–60	5450	1225180	55000	40566	736
* SB–V10	8 : 1	220	200 (50X28)	F–60, F–80	7300	1641105	75000	55317	883

Size and component specification in this catalogue are subject to change without prior notice for quality improvement.
* Mark has been changed and updated.

STANDARD TYPE-A

Thrust & Torque Horizontal Input with Single Reduction Gear Attachment

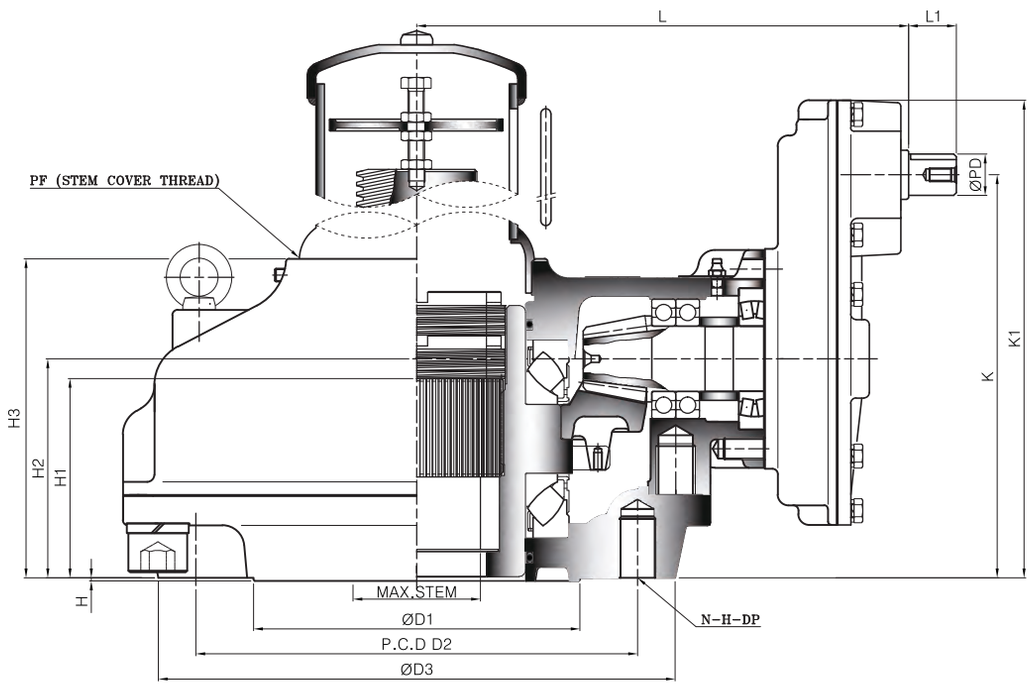

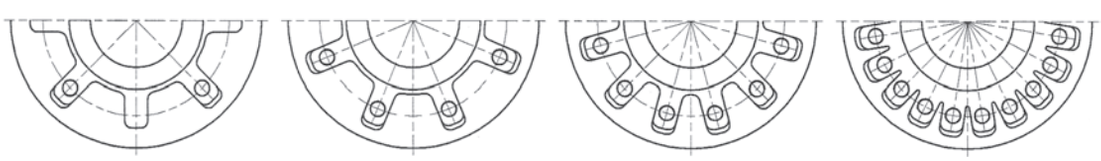

TYPE - A TYPE - B TYPE - C TYPE - D

Dimension >>>

UNIT : mm

DIM / MODEL	BASE PART							EXTERNAL PART						INPUT SHAFT PART			HAND WHEEL	STEM COVER
	TYPE	FLANGE	ØD1	P.C.D ØD2	P.C.D N-H-DP	ØD3	H	H1	H2	H3	K	K1	L	L1	ØPD	KEY		
SB-V0-1S	A	F-14	100	140	4-M16-24	175	3	72	81	121	160	203	201.5	34	26	8X7	250	PF2-1/2"
SB-V1-1S		F-16	130	165	4-M20-30	210		84	98	140	177	220	214				300	PF3"
SB-V2-1S	B	F-16 (F-20)	140	205	8-M16-24	250	3	95	115	159.5	208	256	236.5	34	26	8X7	400	PF3-1/2"
SB-V3-1S		F-25	200	254	8-M16-24	300		102	119	166.5	212	260	256.5				500	PF4"
SB-V35-1S		F-30	230	298	8-M20-30	350		122	138	195	259	316	333	34	32	10X8	630	PF5"
SB-V4-1S		F-35	260	356	8-M30-45	410		133	150	209	271	328	358					PF6"
SB-V5-1S		F-40	300	406	8-M36-55	475		161	177	245	322	384.5	387				710	
SB-V55-1S		F-40	300	406	8-M36-55	475		171	192	261	337	399.5	407					
SB-V6-1S		F-40	300	406	8-M36-55	475		185	201	283	370	439	472	44	38	12X8	800	PF8"
SB-V7-1S	C	F-48	370	483	12-M36-55	560	5	206	222	309	391	459	497	44	38	12X8	900	PF8"
SB-V75-1S		F-48	370	483	12-M36-55	560		221	248	340	478	564	620	58	50	16X10	1000	PF10"
SB-V8-1S		F-48	370	483	12-M36-55	560		233	259	352	489	575	651					
SB-V85-1S	D	F-60	470	603	20-M36-55	700	5	248	278	373	508	594	695	58	50	16X10	1000	PF12"
SB-V9-1S		F-60	470	603	20-M36-55	700		263	295	398	580	696	821	58	50	16X10	1000	PF12"
* SB-V10-1S		F-80	670	813	20-M42-63	900		378	375	490	659	775	886					

Size and component specification in this catalogue are subject to change without prior notice for quality improvement.
* Mark has been changed and updated.

Feature >>>

- This series suitable for use with Gate & Globe type valve. Also sluice gates and any other type requiring linear motion for thrust and torque applications.
- Unique Top Entry Replaceable Stem Nut. High Tensile Aluminum bronze material providing corrosion and abrasion resistance.
- Castings are Ductile Iron, class 65-45-12 providing high strength and impact resistance.
- Heavy duty roller bearings supporting both radial & axial thrust loads.
- Gears are Machine cut, heat treated and ground for optimum operation Units are completely O-Ring Sealed suitable for temporary submergence to meet Ip67 class.
- Many options, such as hand wheels, chain wheels, stem covers, position dial indicators are available.

DIAL INDICATOR

A unique local position dial indicator is available.
It is graduated in percent from 0% (close) to 100% (open).

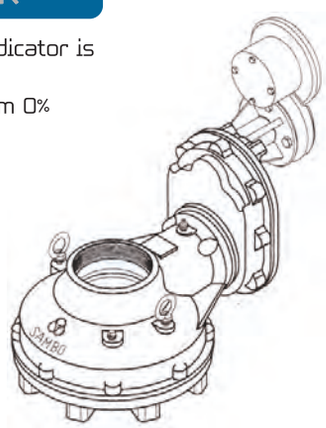

M·O·V OPTION

Bevel Gear can be provided with Motor actuator input flanges to accept standard ISO Mounting Base.

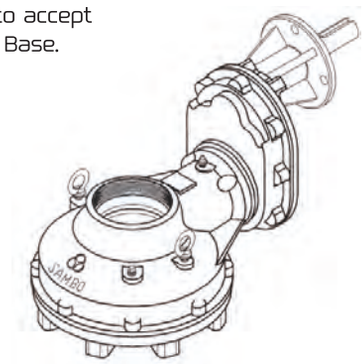

Selection Chart for Manual Operation >>>

SIZE / MODEL	GEAR RATIO	MAX. STEM ACCEPTANCE		BASE MOUNTING OPTION & STANDARD	MAX. THRUST CAPACITY		MAX. TORQUE CAPACITY		WEIGHT
		TW	KEY		KN	lbf	N–m	Ft . lbf	Kg
SB–V0–1S	6.5 : 1	46	38 (12X8)	F–10, F–12, F–14	127	28550	600	442	20
SB–V1–1S	7 : 1	55	45 (14X9)	F–14, F–16	141	31700	980	723	26
SB–V2–1S	10.13 : 1	62	52 (16X10)	F–14, F–16, (F–20)	190	42710	1500	1106	41
SB–V3–1S	12.66 : 1	72	60 (18X11)	F–16, (F–20), F–25	288	64750	2500	1844	52
SB–V35–1S	16.5 : 1	85	72 (20X12)	F–25, F–30	350	78680	3500	2581	90
SB–V4–1S	18 : 1	98	84 (22X14)	F–25, F–30, F–35	400	89920	5200	3835	112
SB–V5–1S	22.94 : 1	110	95 (28X16)	F–25, F–30, F–35, F–40	510	114650	7800	5753	163
SB–V55–1S	24.5 : 1	120	105 (28X16)	F–30, F–35, F–40	1500	337210	10400	7671	214
SB–V6–1S	28 : 1	130	115 (32X18)	F–30, F–35, F–40	2310	519300	13000	9588	281
SB–V7–1S	30.22 : 1	150	130 (36X20)	F–35, F–40, F–48	2500	562020	17600	12981	346
SB–V75–1S	40 : 1	160	140 (36X20)	F–40, F–48	3450	775590	21000	15489	532
SB–V8–1S	40 : 1	180	160 (40X22)	F–40, F–48	4100	921700	32000	23602	545
SB–V85–1S	40 : 1	190	170 (40X22)	F–48, F–60	5150	1157760	40000	29502	870
SB–V9–1S	40 : 1	200	180 (45X25)	F–48, F–60	5450	1225180	55000	40566	1200
* SB–V10–1S	40 : 1	220	200 (50X28)	F–60, F–80	7300	1641105	75000	55317	1410

Size and component specification in this catalogue are subject to change without prior notice for quality improvement.
* Mark has been changed and updated.

STANDARD TYPE-A Twin Shaft

Thrust & Torque(Twin Shaft) Horizontal Input with Single Reduction Gear Attachment

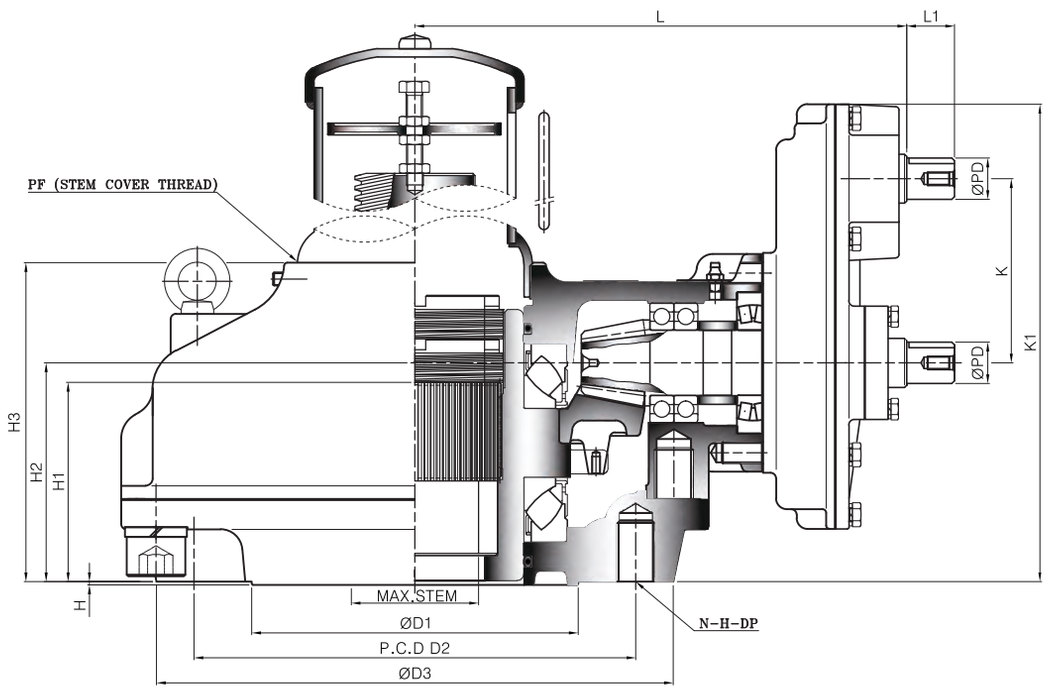

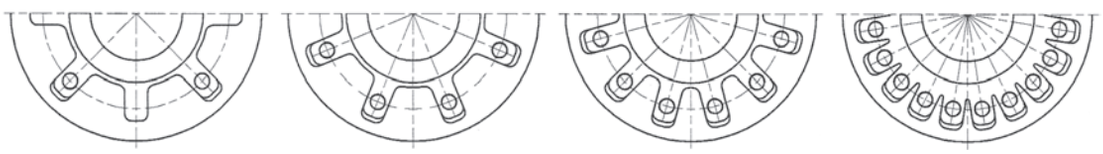

TYPE - A TYPE - B TYPE - C TYPE - D

Dimension >>>

UNIT : mm

MODEL \ DIM	BASE PART							EXTERNAL PART						INPUT SHAFT PART			HAND WHEEL	STEM COVER
	TYPE	FLANGE	ØD1	P.C.D ØD2	P.C.D N-H-DP	ØD3	H	H1	H2	H3	K	K1	L	L1	ØPD	KEY		
SB-V0-1ST	A	F-14	100	140	4-M16-24	175	3	72	81	121	79	203	201.5	34	26	8X7	250	PF2-1/2"
SB-V1-1ST		F-16	130	165	4-M20-30	210		84	98	140	79	220	214				300	PF3"
SB-V2-1ST	B	F-16 (F-20)	140	205	8-M16-24	250	3	95	115	159.5	93	256	236.5	34	26	8X7	400	PF3-1/2"
SB-V3-1ST		F-25	200	254	8-M16-24	300		102	119	166.5	93	260	256.5				500	PF4"
SB-V35-1ST		F-30	230	298	8-M20-30	350		122	138	195	121	316	333	34	32	10X8	630	PF5"
SB-V4-1ST		F-35	260	356	8-M30-45	410		133	150	209	121	328	358					PF6"
SB-V5-1ST		F-40	300	406	8-M36-55	475		161	177	245	145	384.5	387				710	
SB-V55-1ST		F-40	300	406	8-M36-55	475		171	192	261	145	399.5	407					
SB-V6-1ST		F-40	300	406	8-M36-55	475		185	201	283	169	439	472	44	38	12X8	800	PF8"
SB-V7-1ST	C	F-48	370	483	12-M36-55	560	5	206	222	309	169	459	497	44	38	12X8	900	PF8"
SB-V75-1ST		F-48	370	483	12-M36-55	560		221	248	340	230	564	620	58	50	16X10	1000	PF10"
SB-V8-1ST		F-48	370	483	12-M36-55	560		233	259	352	230	575	651	58	50	16X10	1000	PF10"
SB-V85-1ST	D	F-60	470	603	20-M36-55	700	5	248	278	373	230	594	695	58	50	16X10	1000	PF12"
SB-V9-1ST		F-60	470	603	20-M36-55	700		263	295	398	284	696	821	58	50	16X10	1000	PF12"
* SB-V10-1ST		F-80	670	813	20-M42-63	900		378	375	490	284	775	886					

Size and component specification in this catalogue are subject to change without prior notice for quality improvement.
* Mark has been changed and updated.

Feature >>>

- This series suitable for use with Gate & Globe type valve. Also sluice gates and any other type requiring linear motion for thrust and torque applications.
- Unique Top Entry Replaceable Stem Nut. High Tensile Aluminum bronze material providing corrosion and abrasion resistance.
- Castings are Ductile Iron, class 65-45-12 providing high strength and impact resistance.
- Heavy duty roller bearings supporting both radial & axial thrust loads.
- Gears are Machine cut, heat treated and ground for optimum operation Units are completely O-Ring Sealed suitable for temporary submergence to meet Ip67 class.
- Many options, such as hand wheels, chain wheels, stem covers, position dial indicators are available.

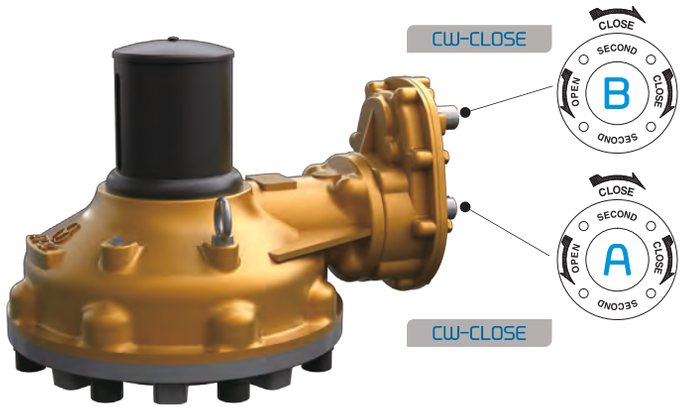

A. Primary Input Shaft (High Speed Input Shaft)
Allow for less turns after valve has been unseating.

B. Second Input Shaft (Low Speed Input Shaft)
Provides maximum mechanical advantage for seating and unseating of valves.

Bevel Gear

SAMBO
The World's Highest Quality!

Global Leader
SAMBO
SPIRAL BEVEL GEAR ACTUATORS

The World's Highest Quality!

Selection Chart for Manual Operation >>>

SIZE / MODEL	GEAR RATIO		MAX. STEM ACCEPTANCE		BASE MOUNTING OPTION & STANDARD	MAX. THRUST CAPACITY		MAX. TORQUE CAPACITY		WEIGHT
	PRIMARY	SECOND	TW	KEY		KN	lbf	N–m	Ft . lbf	Kg
SB–V0–1ST	3.25 : 1	6.5 : 1	46	38 (12X8)	F–10, F–12, F–14	127	28550	600	442	20
SB–V1–1ST	3.5 : 1	7 : 1	55	45 (14X9)	F–14, F–16	141	31700	980	723	26
SB–V2–1ST	4 : 1	10.13 : 1	62	52 (16X10)	F–14, F–16, (F–20)	190	42710	1500	1106	41
SB–V3–1ST	5 : 1	12.66 : 1	72	60 (18X11)	F–16, (F–20), F–25	288	64750	2500	1844	52
SB–V35–1ST	5.5 : 1	16.5 : 1	85	72 (20X12)	F–25, F–30	350	78680	3500	2581	90
SB–V4–1ST	6 : 1	18 : 1	98	84 (22X14)	F–25, F–30, F–35	400	89920	5200	3835	112
SB–V5–1ST	6.56 : 1	22.94 : 1	110	95 (28X16)	F–25, F–30, F–35, F–40	510	114650	7800	5753	163
SB–V55–1ST	7 : 1	24.5 : 1	120	105 (28X16)	F–30, F–35, F–40	1500	337210	10400	7671	214
SB–V6–1ST	7 : 1	28 : 1	130	115 (32X18)	F–30, F–35, F–40	2310	519300	13000	9588	281
SB–V7–1ST	7.56 : 1	30.22 : 1	150	130 (36X20)	F–35, F–40, F–48	2500	562020	17600	12981	346
SB–V75–1ST	8 : 1	40 : 1	160	140 (36X20)	F–40, F–48	3450	775590	21000	15489	532
SB–V8–1ST	8 : 1	40 : 1	180	160 (40X22)	F–40, F–48	4100	921700	32000	23602	545
SB–V85–1ST	8 : 1	40 : 1	190	170 (40X22)	F–48, F–60	5150	1157760	40000	29502	870
SB–V9–1ST	8 : 1	40 : 1	200	180 (45X25)	F–48, F–60	5450	1225180	55000	40566	1200
* SB–V10–1ST	8 : 1	40 : 1	220	200 (50X28)	F–60, F–80	7300	1641105	75000	55317	1410

Size and component specification in this catalogue are subject to change without prior notice for quality improvement.
* Mark has been changed and updated.

SAMBO

STANDARD TYPE-A

Thrust & Torque Horizontal Input with Double Reduction Gear Attachment

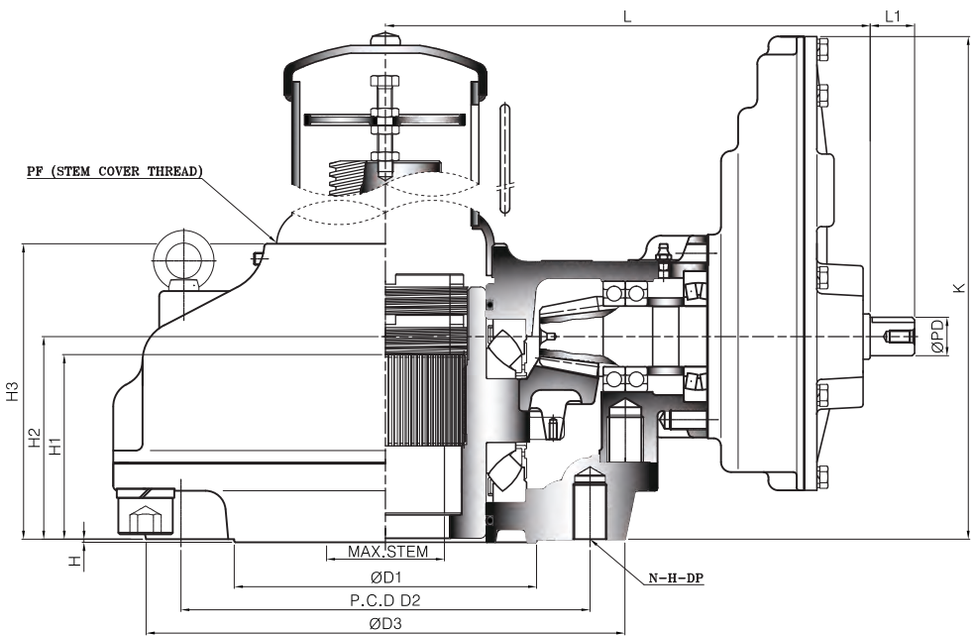

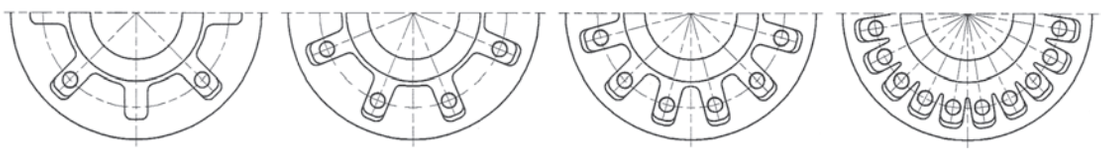

TYPE - A TYPE - B TYPE - C TYPE - D

Dimension >>>

UNIT : mm

DIM / MODEL	BASE PART							EXTERNAL PART					INPUT SHAFT PART			HAND WHEEL	STEM COVER
	TYPE	FLANGE	ØD1	P.C.D ØD2	P.C.D N-H-DP	ØD3	H	H1	H2	H3	K	L	L1	ØPD	KEY		
* SB-V0-1SD	A	F-14	100	140	4-M16-24	175	3	72	81	121	225	231	34	26	8X7	250	PF2-1/2"
* SB-V1-1SD		F-16	130	165	4-M20-30	210		84	98	140	242	243.5				300	PF3"
SB-V2-1SD	B	F-16 (F-20)	140	205	8-M16-24	250	3	95	115	159.5	259	260.5	34	26	8X7	400	PF3-1/2"
SB-V3-1SD		F-25	200	254	8-M16-24	300		102	119	166.5	263	280.5				500	PF4"
SB-V35-1SD		F-30	230	298	8-M20-30	350		122	138	195	333	369	34	32	10X8	630	PF5"
SB-V4-1SD		F-35	260	356	8-M30-45	410		133	150	209	345	394					PF6"
SB-V5-1SD		F-40	300	406	8-M36-55	475		166	177	246	426	426				710	
SB-V55-1SD		F-40	300	406	8-M36-55	475		171	192	262	441	446					
SB-V6-1SD		F-40	300	406	8-M36-55	475		185	201	283	498.5	498	44	38	12X8	800	PF8"
SB-V7-1SD	C	F-48	370	483	12-M36-55	560	5	206	222	309	519.5	526	44	38	12X8	900	PF8"
SB-V75-1SD		F-48	370	483	12-M36-55	560		221	248	340	628	666	58	50	16X10	1000	PF10"
SB-V8-1SD		F-48	370	483	12-M36-55	560		233	259	352	638	697	58	50	16X10	1000	PF10"
SB-V85-1SD	D	F-60	470	603	20-M36-55	700	5	248	278	373	658	741	58	50	16X10	1000	PF12"
SB-V9-1SD		F-60	470	603	20-M36-55	700		263	295	398	784	876	58	50	16X10	1000	PF12"
* SB-V10-1SD		F-80	670	813	20-M42-63	900		378	375	490	863	941					

Size and component specification in this catalogue are subject to change without prior notice for quality improvement.
* Mark has been changed and updated.

Feature >>>

- This series suitable for use with Gate & Globe type valve. Also sluice gates and any other type requiring linear motion for thrust and torque applications.
- Unique Top Entry Replaceable Stem Nut. High Tensile Aluminum bronze material providing corrosion and abrasion resistance.
- Castings are Ductile Iron, class 65-45-12 providing high strength and impact resistance.
- Heavy duty roller bearings supporting both radial & axial thrust loads.
- Gears are Machine cut, heat treated and ground for optimum operation Units are completely O-Ring Sealed suitable for temporary submergence to meet Ip67 class.
- Many options, such as hand wheels, chain wheels, stem covers, position dial indicators are available.

DIAL INDICATOR

A unique local position dial indicator is available.
It is graduated in percent from 0% (close) to 100% (open).

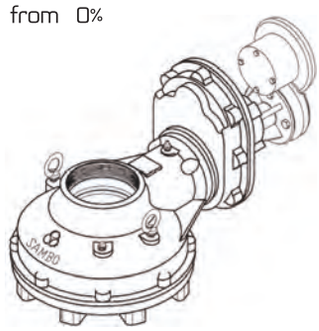

M·O·V OPTION

Bevel Gear can be provided with Motor actuator input flanges to accept standard ISO Mounting Base.

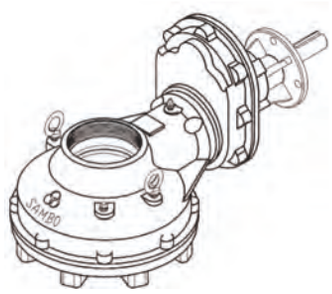

Selection Chart for Manual Operation >>>

SIZE / MODEL	MAX. GEAR RATIO (Changeable)	MAX. STEM ACCEPTANCE		BASE MOUNTING OPTION & STANDARD	MAX. THRUST CAPACITY		MAX. TORQUE CAPACITY		WEIGHT
		TW	KEY		KN	lbf	N–m	Ft . lbf	Kg
* SB–V0–1SD	20.86 : 1	46	38 (12X8)	F–10, F–12, F–14	127	28550	600	442	24
* SB–V1–1SD	22.46 : 1	55	45 (14X9)	F–14, F–16	141	31700	980	723	30
SB–V2–1SD	25.67 : 1	62	52 (16X10)	F–14, F–16, (F–20)	190	42710	1500	1106	42
SB–V3–1SD	32.08 : 1	72	60 (18X11)	F–16, (F–20), F–25	288	64750	2500	1844	54
SB–V35–1SD	49.5 : 1	85	72 (20X12)	F–25, F–30	350	78680	3500	2581	94
SB–V4–1SD	54 : 1	98	84 (22X14)	F–25, F–30, F–35	400	89920	5200	3835	116
SB–V5–1SD	80.31 : 1	110	95 (28X16)	F–25, F–30, F–35, F–40	510	114650	7800	5753	167
SB–V55–1SD	85.75 : 1	120	105 (28X16)	F–30, F–35, F–40	1500	337210	10400	7671	218
SB–V6–1SD	112 : 1	130	115 (32X18)	F–30, F–35, F–40	2310	519300	13000	9588	295
SB–V7–1SD	120.88 : 1	150	130 (36X20)	F–35, F–40, F–48	2500	562020	17600	12981	359
SB–V75–1SD	200 : 1	160	140 (36X20)	F–40, F–48	3450	775590	21000	15489	560
SB–V8–1SD	200 : 1	180	160 (40X22)	F–40, F–48	4100	921700	32000	23602	573
SB–V85–1SD	200 : 1	190	170 (40X22)	F–48, F–60	5150	1157760	40000	29502	918
SB–V9–1SD	200 : 1	200	180 (45X25)	F–48, F–60	5450	1225180	55000	40566	1255
* SB–V10–1SD	200 : 1	220	200 (50X28)	F–60, F–80	7300	1641105	75000	55317	1465

Size and component specification in this catalogue are subject to change without prior notice for quality improvement.
* Mark has been changed and updated.

STANDARD TYPE-A Twin Shaft

Thrust & Torque(Twin Shaft) Horizontal Input with Double Reduction Gear Attachment

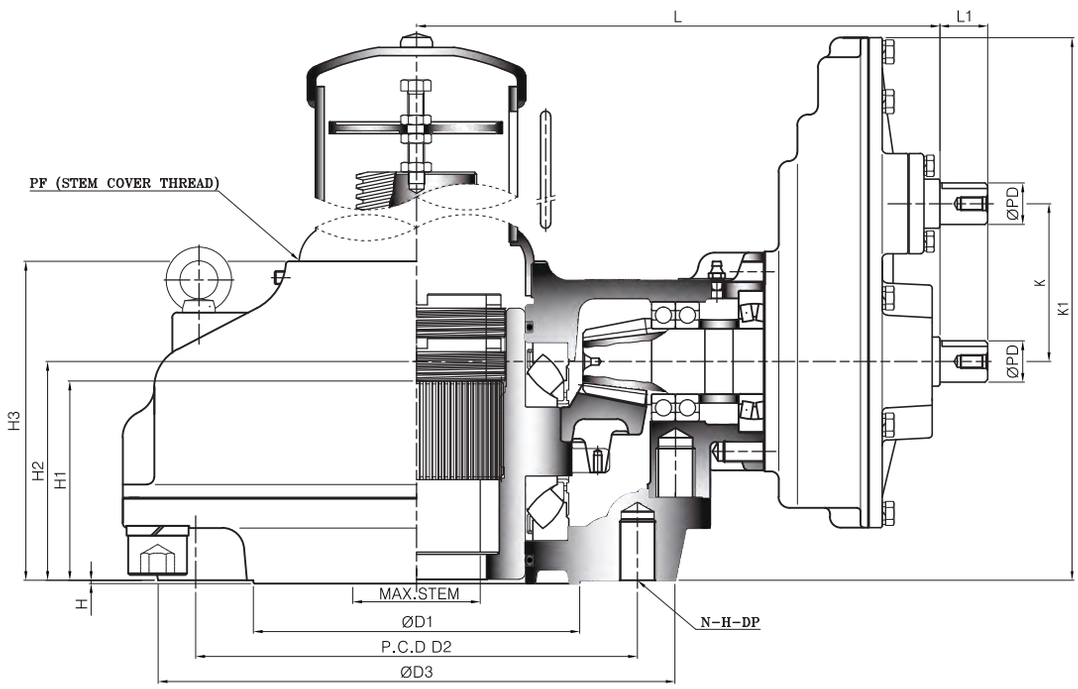

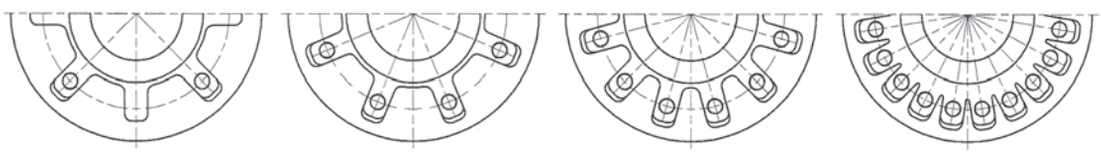

TYPE - A TYPE - B TYPE - C TYPE - D

Dimension >>>

UNIT : mm

DIM / MODEL	BASE PART							EXTERNAL PART						INPUT SHAFT PART			HAND WHEEL	STEM COVER
	TYPE	FLANGE	ØD1	P.C.D ØD2	P.C.D N-H-DP	ØD3	H	H1	H2	H3	K	K1	L	L1	ØPD	KEY		
* SB-V0-1SDT	A	F-14	100	140	4-M16-24	175	3	72	81	121	69	225	231	34	26	8X7	250	PF2-1/2"
* SB-V1-1SDT		F-16	130	165	4-M20-30	210		84	98	140	69	242	243.5				300	PF3"
SB-V2-1SDT	B	F-16 (F-20)	140	205	8-M16-24	250	3	95	115	159.5	69	259	260.5	34	26	8X7	400	PF3-1/2"
SB-V3-1SDT		F-25	200	254	8-M16-24	300		102	119	166.5	69	263	280.5				500	PF4"
SB-V35-1SDT		F-30	230	298	8-M20-30	350		122	138	195	93	333	369	34	32	10X8	630	PF5"
SB-V4-1SDT		F-35	260	356	8-M30-45	410		133	150	209	93	345	394					PF6"
SB-V5-1SDT		F-40	300	406	8-M36-55	475		161	177	245	121	426	426				710	
SB-V55-1SDT		F-40	300	406	8-M36-55	475		171	192	261	121	441	446					
SB-V6-1SDT		F-40	300	406	8-M36-55	475		185	201	283	145	498.5	498	44	38	12X8	800	PF8"
SB-V7-1SDT	C	F-48	370	483	12-M36-55	560	5	206	222	309	145	519.5	526	44	38	12X8	900	PF8"
SB-V75-1SDT		F-48	370	483	12-M36-55	560		221	248	340	186	628	666	58	50	16X10	1000	PF10"
SB-V8-1SDT		F-48	370	483	12-M36-55	560		233	259	352	186	638	697	58	50	16X10	1000	PF10"
SB-V85-1SDT	D	F-60	470	603	20-M36-55	700	5	248	278	373	186	658	741	58	50	16X10	1000	PF12"
SB-V9-1SDT		F-60	470	603	20-M36-55	700		263	295	398	238	784	876	58	50	16X10	1000	PF12"
* SB-V10-1SDT		F-80	670	813	20-M42-63	900		378	375	490	238	863	941					

Size and component specification in this catalogue are subject to change without prior notice for quality improvement.
* Mark has been changed and updated.

Feature >>>

- This series suitable for use with Gate & Globe type valve. Also sluice gates and any other type requiring linear motion for thrust and torque applications.
- Unique Top Entry Replaceable Stem Nut. High Tensile Aluminum bronze material providing corrosion and abrasion resistance.
- Castings are Ductile Iron, class 65-45-12 providing high strength and impact resistance.
- Heavy duty roller bearings supporting both radial & axial thrust loads.
- Gears are Machine cut, heat treated and ground for optimum operation Units are completely O-Ring Sealed suitable for temporary submergence to meet Ip67 class.
- Many options, such as hand wheels, chain wheels, stem covers, position dial indicators are available.

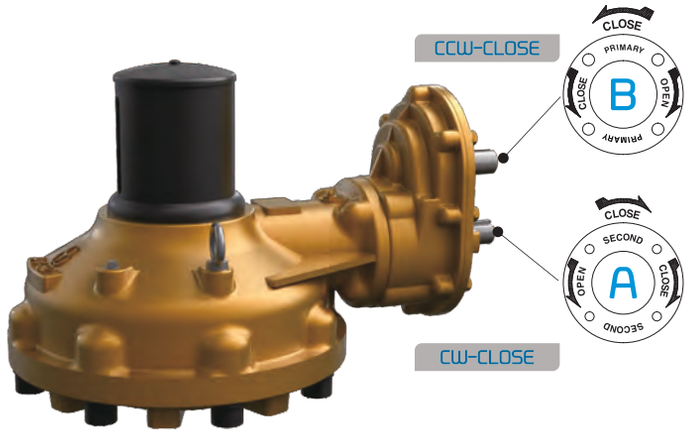

A. Second Input Shaft (Low Speed Input Shaft)
Provides maximum mechanical advantage for seating and unseating of valves.

B. Primary Input Shaft (High Speed Input Shaft)
Allow for less turns after valve has been unseating.

SAMBO
The World's Highest Quality!

Global Leader
SAMBO
SPIRAL BEVEL GEAR ACTUATORS
The World's Highest Quality!

Selection Chart for Manual Operation >>>

SIZE / MODEL	MAX.GEAR RATIO (Changeable)		MAX. STEM ACCEPTANCE		BASE MOUNTING OPTION & STANDARD	MAX. THRUST CAPACITY		MAX. TORQUE CAPACITY		WEIGHT
	PRIMARY	SECOND	TW	KEY		KN	lbf	N–m	Ft . lbf	Kg
* SB–V0–1SDT	8.23 : 1	20.86 : 1	46	38 (12X8)	F–10, F–12, F–14	127	28550	600	442	24
* SB–V1–1SDT	8.86 : 1	22.46 : 1	55	45 (14X9)	F–14, F–16	141	31700	980	723	30
SB–V2–1SDT	10.13 : 1	25.67 : 1	62	52 (16X10)	F–14, F–16, (F–20)	190	42710	1500	1106	42
SB–V3–1SDT	12.66 : 1	32.08 : 1	72	60 (18X11)	F–16, (F–20), F–25	288	64750	2500	1844	54
SB–V35–1SDT	16.5 : 1	49.5 : 1	85	72 (20X12)	F–25, F–30	350	78680	3500	2581	94
SB–V4–1SDT	18 : 1	54 : 1	98	84 (22X14)	F–25, F–30, F–35	400	89920	5200	3835	116
SB–V5–1SDT	22.94 : 1	80.31 : 1	110	95 (28X16)	F–25, F–30, F–35, F–40	510	114650	7800	5753	167
SB–V55–1SDT	24.5 : 1	85.75 : 1	120	105 (28X16)	F–30, F–35, F–40	1500	337210	10400	7671	218
SB–V6–1SDT	28 : 1	112 : 1	130	115 (32X18)	F–30, F–35, F–40	2310	519300	13000	9588	295
SB–V7–1SDT	30.22 : 1	120.88 : 1	150	130 (36X20)	F–35, F–40, F–48	2500	562020	17600	12981	359
SB–V75–1SDT	40 : 1	200 : 1	160	140 (36X20)	F–40, F–48	3450	775590	21000	15489	560
SB–V8–1SDT	40 : 1	200 : 1	180	160 (40X22)	F–40, F–48	4100	921700	32000	23602	573
SB–V85–1SDT	40 : 1	200 : 1	190	170 (40X22)	F–48, F–60	5150	1157760	40000	29502	918
SB–V9–1SDT	40 : 1	200 : 1	200	180 (45X25)	F–48, F–60	5450	1225180	55000	40566	1255
* SB–V10–1SDT	40 : 1	200 : 1	220	200 (50X28)	F–60, F–80	7300	1641105	75000	55317	1465

Size and component specification in this catalogue are subject to change without prior notice for quality improvement.
* Mark has been changed and updated.

SAMBO

STANDARD TYPE-B

Thrust & Torque Vertical Input with Single Reduction Gear Attachment

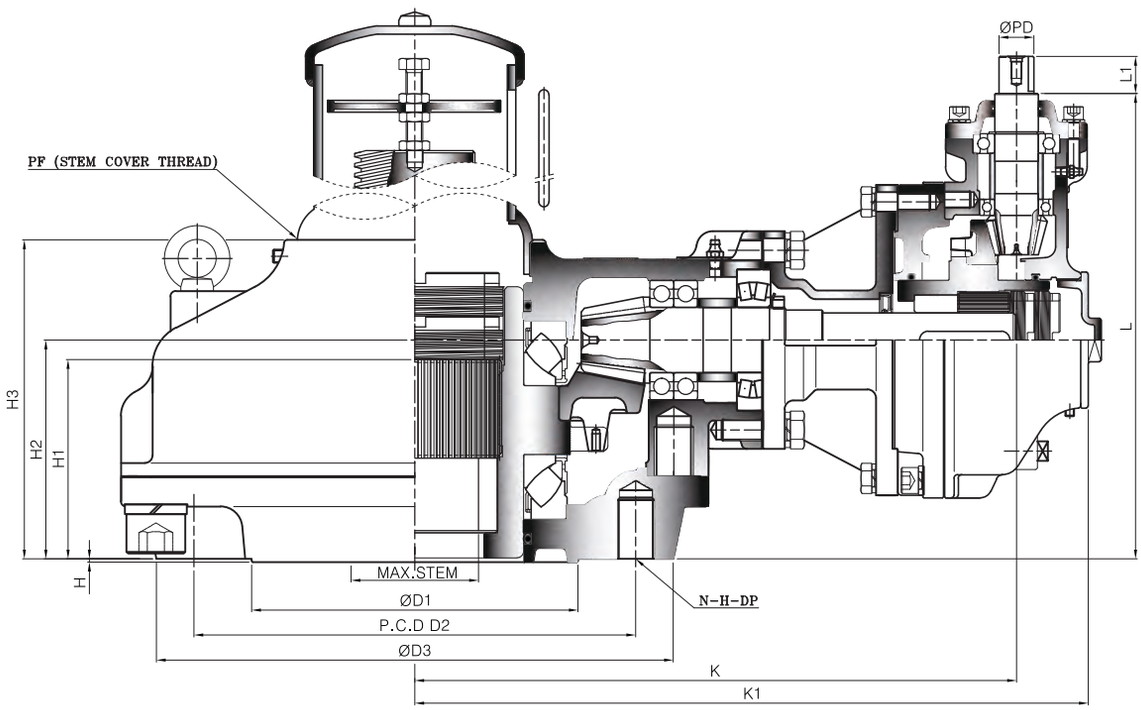

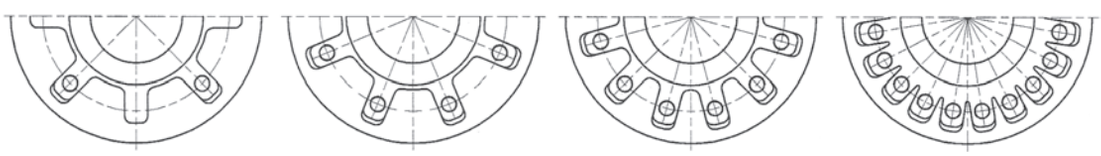

TYPE - A TYPE - B TYPE - C TYPE - D

Dimension >>>

UNIT : mm

DIM / MODEL	BASE PART							EXTERNAL PART						INPUT SHAFT PART			HAND WHEEL	STEM COVER
	TYPE	FLANGE	ØD1	P.C.D ØD2	P.C.D N-H-DP	ØD3	H	H1	H2	H3	K	K1	L	L1	ØPD	KEY		
SB-V0-2B	A	F-14	100	140	4-M16-24	175	3	72	81	121	244.5	278.5	170	34	26	8X7	250	PF2-1/2"
SB-V1-2B		F-16	130	165	4-M20-30	210		84	98	140	252	286	187				250	PF3"
SB-V2-2B	B	F-16 (F-20)	140	205	8-M16-24	250	3	95	115	159.5	299	340	236	34	26	8X7	300	PF3-1/2"
SB-V3-2B		F-25	200	254	8-M16-24	300		102	119	166.5	326.5	368	250				300	PF4"
SB-V35-2B		F-30	230	298	8-M20-30	350		122	138	195	415	474	292.5	34	32	10X8	400	PF5"
SB-V4-2B		F-35	260	356	8-M30-45	410		133	150	209	457	521	317				500	PF6"
SB-V5-2B		F-40	300	406	8-M36-55	475		161	177	245	419	488.5	365				630	
SB-V55-2B		F-40	300	406	8-M36-55	475		171	192	261	439	508.5	380					
SB-V6-2B		F-40	300	406	8-M36-55	475		185	201	283	482	557.5	409	34	32	10X8	710	PF8"
SB-V7-2B	C	F-48	370	483	12-M36-55	560	5	206	222	309	510	585.5	430	34	32	10X8	710	PF8"
* SB-V75-2B		F-48	370	483	12-M36-55	560		221	248	340	567	639	514	44	38	12X8	800	PF10"
SB-V8-2B		F-48	370	483	12-M36-55	560		233	259	352	608	670	524	44	38	12X8	800	PF10"
SB-V85-2B	D	F-60	470	603	20-M36-55	700	5	248	278	373	654	730	569	44	38	12X8	900	PF12"
SB-V9-2B		F-60	470	603	20-M36-55	700		263	295	398	749	833	630	44	38	12X8	900	PF12"
* SB-V10-2B		F-80	670	813	20-M42-63	900		378	375	490	845	938	750	58	50	16X10	1000	

Size and component specification in this catalogue are subject to change without prior notice for quality improvement.
* Mark has been changed and updated.

Feature >>>

- This series suitable for use with Gate & Globe type valve. Also sluice gates and any other type requiring linear motion for thrust and torque applications.
- Unique Top Entry Replaceable Stem Nut. High Tensile Aluminum bronze material providing corrosion and abrasion resistance.
- Castings are Ductile Iron, class 65-45-12 providing high strength and impact resistance.
- Heavy duty roller bearings supporting both radial & axial thrust loads.
- Gears are Machine cut, heat treated and ground for optimum operation Units are completely O-Ring Sealed suitable for temporary submergence to meet IP67 class.
- Many options, such as hand wheels, chain wheels, stem covers, position dial indicators are available.

DIAL INDICATOR

A unique local position dial indicator is available.
It is graduated in percent from 0% (close) to 100% (open).

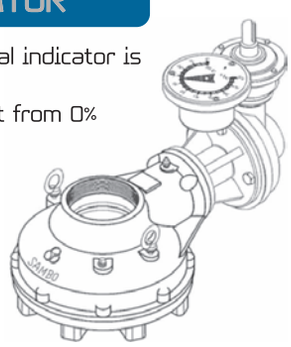

M·O·V OPTION

Bevel Gear can be provided with Motor actuator input flanges to accept standard ISO Mounting Base.

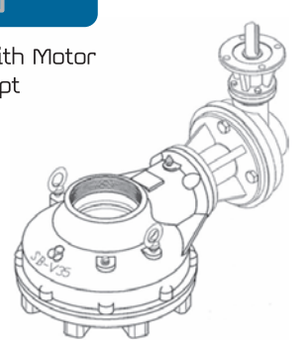

Selection Chart for Manual Operation >>>

SIZE / MODEL	GEAR RATIO	MAX. STEM ACCEPTANCE		BASE MOUNTING OPTION & STANDARD	MAX. THRUST CAPACITY		MAX. TORQUE CAPACITY		WEIGHT
		TW	KEY		KN	lbf	N–m	Ft . lbf	Kg
SB–V0–2B	6.5 : 1	46	38 (12X8)	F–10, F–12, F–14	127	28550	600	442	23
SB–V1–2B	7 : 1	55	45 (14X9)	F–14, F–16	141	31700	980	723	29
SB–V2–2B	10 : 1	62	52 (16X10)	F–14, F–16, (F–20)	190	42710	1500	1106	42
SB–V3–2B	15 : 1	72	60 (18X11)	F–16, (F–20), F–25	288	64750	2500	1844	56
SB–V35–2B	17.87 : 1	85	72 (20X12)	F–25, F–30	350	78680	3500	2581	93
SB–V4–2B	21 : 1	98	84 (22X14)	F–25, F–30, F–35	400	89920	5200	3835	121
SB–V5–2B	26.22 : 1	110	95 (28X16)	F–25, F–30, F–35, F–40	510	114650	7800	5753	184
SB–V55–2B	28 : 1	120	105 (28X16)	F–30, F–35, F–40	1500	337210	10400	7671	235
SB–V6–2B	35 : 1	130	115 (32X18)	F–30, F–35, F–40	2310	519300	13000	9588	297
SB–V7–2B	37.77 : 1	150	130 (36X20)	F–35, F–40, F–48	2500	562020	17600	12981	362
* SB–V75–2B	44 : 1	160	140 (36X20)	F–40, F–48	3450	775590	21000	15489	538
SB–V8–2B	44 : 1	180	160 (40X22)	F–40, F–48	4100	921700	32000	23602	551
SB–V85–2B	48 : 1	190	170 (40X22)	F–48, F–60	5150	1157760	40000	29502	631
SB–V9–2B	52.44 : 1	200	180 (45X25)	F–48, F–60	5450	1225180	55000	40566	890
* SB–V10–2B	56 : 1	220	200 (50X28)	F–60, F–80	7300	1641105	75000	55317	1121

Size and component specification in this catalogue are subject to change without prior notice for quality improvement.
* Mark has been changed and updated.

SAMBO

STANDARD TYPE-B

Thrust & Torque Vertical Input with Double Reduction Gear Attachment

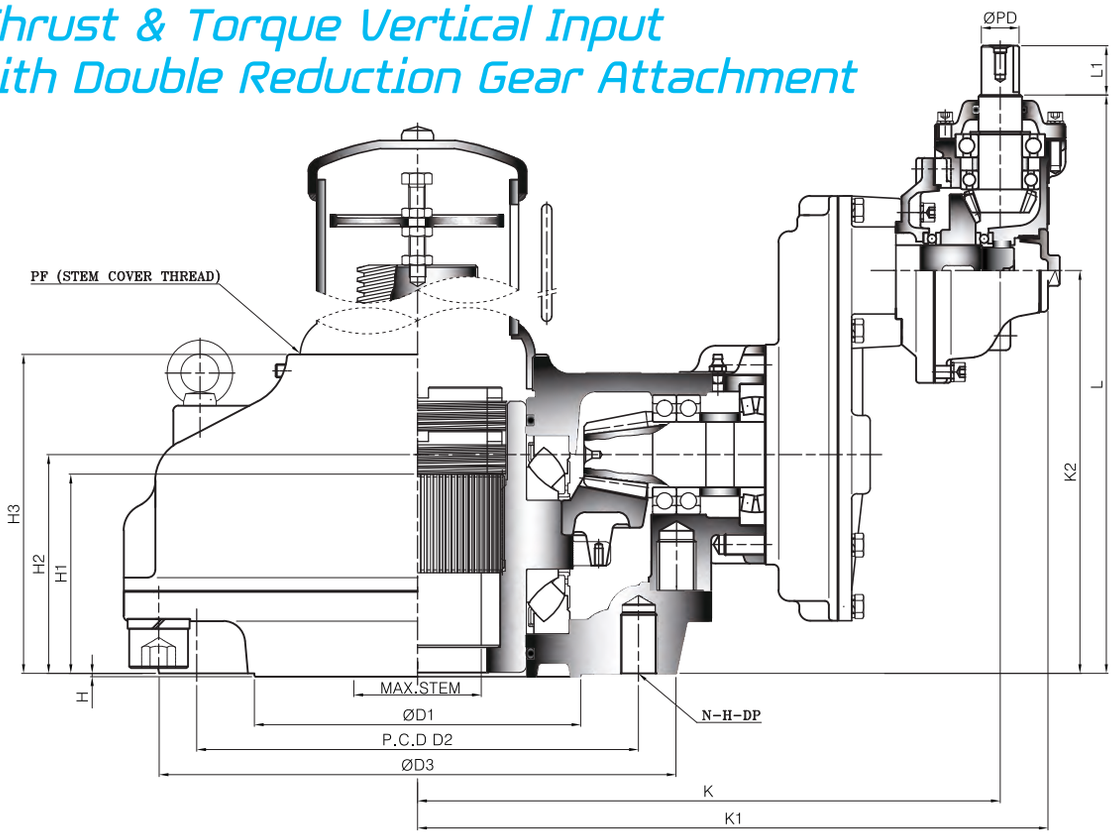

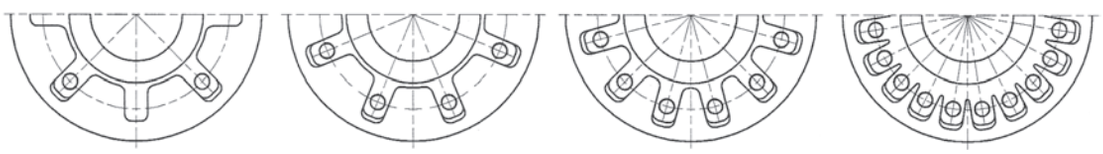

TYPE - A TYPE - B TYPE - C TYPE - D

Dimension >>>

UNIT : mm

DIM / MODEL	BASE PART							EXTERNAL PART							INPUT SHAFT PART			HAND WHEEL	STEM COVER
	TYPE	FLANGE	ØD1	P.C.D ØD2	P.C.D N-H-DP	ØD3	H	H1	H2	H3	K	K1	K2	L	L1	ØPD	KEY		
SB-V0-1S2B	A	F-14	100	140	4-M16-24	175	3	72	81	121	242.5	282.5	160	249	34	26	8X7	250	PF2-1/2"
SB-V1-1S2B		F-16	130	165	4-M20-30	210		84	98	140	255	295	177	266				250	PF3"
SB-V2-1S2B	B	F-16 (F-20)	140	205	8-M16-24	250	3	95	115	159.5	277.5	317.5	208	297	34	26	8X7	250	PF3-1/2"
SB-V3-1S2B		F-25	200	254	8-M16-24	300		102	119	166.5	297.5	337.5	212	301				250	PF4"
SB-V35-1S2B		F-30	230	298	8-M20-30	350		122	138	195	390	435	259	380	34	26	8X7	300	PF5"
SB-V4-1S2B		F-35	260	356	8-M30-45	410		133	150	209	416	466	271	392				300	PF6"
SB-V5-1S2B		F-40	300	406	8-M36-55	475		161	177	245	446	491	322	443				300	
SB-V55-1S2B		F-40	300	406	8-M36-55	475		171	192	261	466	511	337	458				300	
SB-V6-1S2B		F-40	300	406	8-M36-55	475		185	201	283	539.5	589.5	370	501	34	26	8X7	400	PF8"
SB-V7-1S2B	C	F-48	370	483	12-M36-55	560	5	206	222	309	567.5	617.5	391	522	34	26	8X7	400	PF8"
* SB-V75-1S2B		F-48	370	483	12-M36-55	560		221	248	340	722.5	787.5	478	666	34	32	10X8	500	PF10"
SB-V8-1S2B		F-48	370	483	12-M36-55	560		233	259	352	753.5	818.5	488	676	34	32	10X8	500	PF10"
SB-V85-1S2B	D	F-60	470	603	20-M36-55	700	5	248	278	373	837	902	508	716	34	32	10X8	630	PF12"
SB-V9-1S2B		F-60	470	603	20-M36-55	700		263	295	398	970	1035	580	788	34	32	10X8	630	PF12"
* SB-V10-1S2B		F-80	670	813	20-M42-63	900		378	375	490	1053	1135.5	659	925	44	38	12X8	710	

Size and component specification in this catalogue are subject to change without prior notice for quality improvement.
* Mark has been changed and updated.

Feature >>>

- This series suitable for use with Gate & Globe type valve. Also sluice gates and any other type requiring linear motion for thrust and torque applications.
- Unique Top Entry Replaceable Stem Nut. High Tensile Aluminum bronze material providing corrosion and abrasion resistance.
- Castings are Ductile Iron, class 65-45-12 providing high strength and impact resistance.
- Heavy duty roller bearings supporting both radial & axial thrust loads.
- Gears are Machine cut, heat treated and ground for optimum operation Units are completely O-Ring Sealed suitable for temporary submergence to meet IP67 class.
- Many options, such as hand wheels, chain wheels, stem covers, position dial indicators are available.

DIAL INDICATOR

A unique local position dial indicator is available.
It is graduated in percent from 0% (close) to 100% (open).

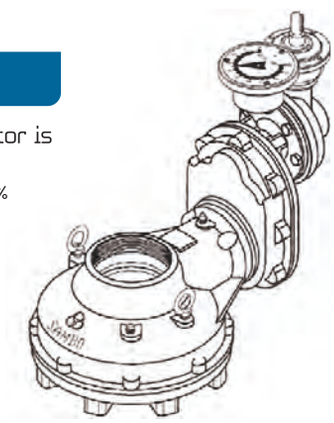

M·O·V OPTION

Bevel Gear can be provided with Motor actuator input flanges to accept standard ISO Mounting Base.

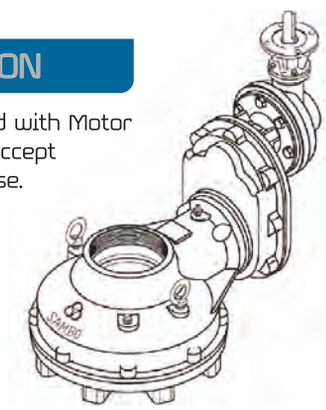

Selection Chart for Manual Operation >>>

SIZE / MODEL	GEAR RATIO	MAX. STEM ACCEPTANCE		BASE MOUNTING OPTION & STANDARD	MAX. THRUST CAPACITY		MAX. TORQUE CAPACITY		WEIGHT
		TW	KEY		KN	lbf	N–m	Ft . lbf	Kg
SB–V0–1S2B	13 : 1	46	38 (12X8)	F–10, F–12, F–14	127	28550	600	442	25
SB–V1–1S2B	14 : 1	55	45 (14X9)	F–14, F–16	141	31700	980	723	31
SB–V2–1S2B	20.26 : 1	62	52 (16X10)	F–14, F–16, (F–20)	190	42710	1500	1106	46
SB–V3–1S2B	25.32 : 1	72	60 (18X11)	F–16, (F–20), F–25	288	64750	2500	1844	57
SB–V35–1S2B	41.25 : 1	85	72 (20X12)	F–25, F–30	350	78680	3500	2581	98
SB–V4–1S2B	45 : 1	98	84 (22X14)	F–25, F–30, F–35	400	89920	5200	3835	119
SB–V5–1S2B	57.36 : 1	110	95 (28X16)	F–25, F–30, F–35, F–40	510	114650	7800	5753	171
SB–V55–1S2B	61.25 : 1	120	105 (28X16)	F–30, F–35, F–40	1500	337210	10400	7671	226
SB–V6–1S2B	84 : 1	130	115 (32X18)	F–30, F–35, F–40	2310	519300	13000	9588	291
SB–V7–1S2B	90.67 : 1	150	130 (36X20)	F–35, F–40, F–48	2500	562020	17600	12981	356
* SB–V75–1S2B	160 : 1	160	140 (36X20)	F–40, F–48	3450	775590	21000	15489	566
SB–V8–1S2B	160 : 1	180	160 (40X22)	F–40, F–48	4100	921700	32000	23602	573
SB–V85–1S2B	200 : 1	190	170 (40X22)	F–48, F–60	5150	1157760	40000	29502	644
SB–V9–1S2B	200 : 1	200	180 (45X25)	F–48, F–60	5450	1225180	55000	40566	873
* SB–V10–1S2B	220 : 1	220	200 (50X28)	F–60, F–80	7300	1641105	75000	55317	1057

Size and component specification in this catalogue are subject to change without prior notice for quality improvement.
* Mark has been changed and updated.

STANDARD TYPE-C Torque only Lug Drive
Horizontal Input

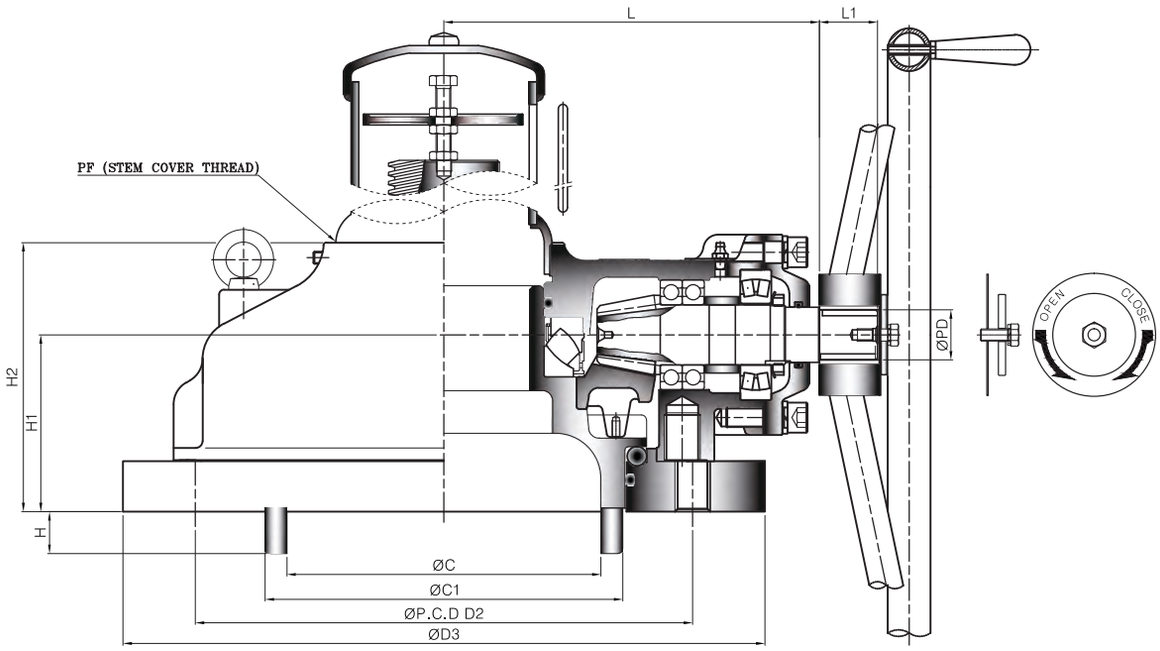

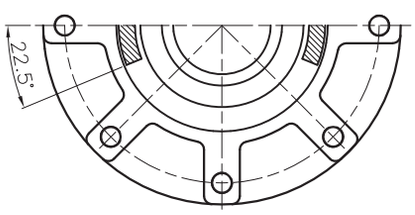

TYPE - A

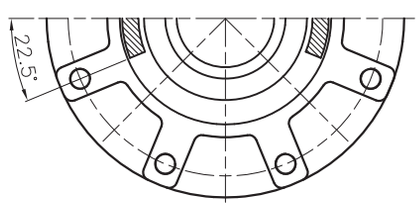

TYPE - B

Dimension >>>

UNIT : mm

DIM / MODEL	BASE PART					CLAMP PART			EXTERNAL PART			INPUT SHAFT PART			HAND WHEEL	STEM COVER
	TYPE	FLANGE	P.C.D ØD2	P.C.D N-H-DP	ØD3	ØC	ØC1	H	H1	H2	L	L1	ØPD	KEY		
SB-VS10C	A	F-14	140	8-3/8"-16UNC	190	74	87	10	72	96	121	34	26	8X7	300	PF2"
		F-16	165	8-1/2"-13UNC												
SB-VS20C		F-16	165	8-1/2"-13UNC	220	91	105	11	73	100	131				300	PF2-1/2"
		(F-20)	193.8													
SB-V0C		F-16	165	8-1/2"-13UNC	220	110	126	14	75	115	155	34	32	10X8	400	
		(F-20)	193.8													
SB-V1C		(F-20)	193.8	8-1/2"-13UNC	300	128	146	17	90	132	167				500	PF3"
		F-25	254	8-5/8"-11UNC												
SB-V2C	B	F-25	254	8-5/8"-11UNC	350	146	166	19	107	152	188	34	32	10X8	630	PF3-1/2"
		F-30	298	8-3/4"-10UNC												
SB-V3C		F-30	298	8-3/4"-10UNC	415	173	197	21	110	158	209				710	PF4"
		F-35	356	8-1"-8UNC												
SB-V35C		F-35	356	8-1"-8UNC	475	220	247	23	122	184	266	44	38	12X8	800	PF5"
		F-40	406	8-1 1/4"-7UNC												
SB-V4C		F-35	356	8-1"-8UNC	475	258	292	25	145	202	291				900	PF6"
		F-40	406	8-1 1/4"-7UNC												
SB-V5C		F-35	356	8-1"-8UNC	480	266	306	27	172	242	334					
		F-40	406	8-1 1/4"-7UNC												

Size and component specification in this catalogue are subject to change without prior notice for quality improvement.
* Mark has been changed and updated.

Feature >>>

- This series suitable for use with Gate & Globe type valve. Also sluice gates and any other type requiring linear motion for thrust and torque applications.
- Unique Top Entry Replaceable Stem Nut. High Tensile Aluminum bronze material providing corrosion and abrasion resistance.
- Castings are Ductile Iron, class 65-45-12 providing high strength and impact resistance.
- Heavy duty roller bearings supporting both radial & axial thrust loads.
- Gears are Machine cut, heat treated and ground for optimum operation Units are completely O-Ring Sealed suitable for temporary submergence to meet IP67 class.
- Many options, such as hand wheels, chain wheels, stem covers, position dial indicators are available.

MOUNTING BASE

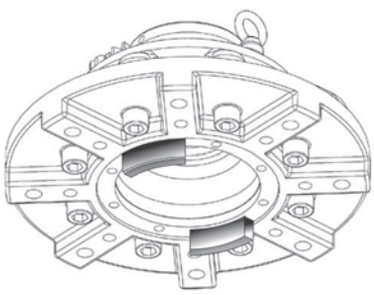

DIAL INDICATOR

A unique local position dial indicator is available. It is graduated in percent from 0% (close) to 100% (open).

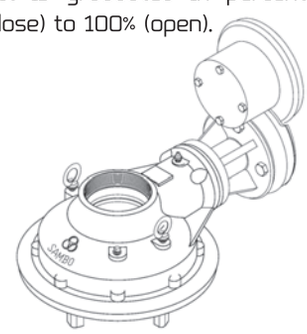

M·O·V OPTION

Bevel Gear can be provided with Motor actuator input flanges to accept standard ISO Mounting Base.

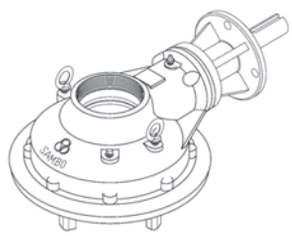

Selection Chart for Manual Operation >>>

SIZE / MODEL	GEAR RATIO	MAX. STEM ACCEPTANCE	MAX. TORQUE CAPACITY		WEIGHT
			N–m	Ft. lbf	Kg
SB–VS10C	2.5 : 1	42	330	243	7.5
SB–VS20C	3 : 1	50	555	409	10
SB–V0C	3.25 : 1	60	900	663	14.5
SB–V1C	3.5 : 1	69	1470	1084	21
SB–V2C	4 : 1	79	2250	1659	29
SB–V3C	5 : 1	97	3750	2765	45
SB–V35C	5.5 : 1	115	5250	3872	72
SB–V4C	6 : 1	130	7800	5752	91
SB–V5C	6.5 : 1	145	11700	8629	123

Size and component specification in this catalogue are subject to change without prior notice for quality improvement.
* Mark has been changed and updated.

STANDARD TYPE-C Torque only Lug Drive

Horizontal Input
with Single Reduction Gear Attachment

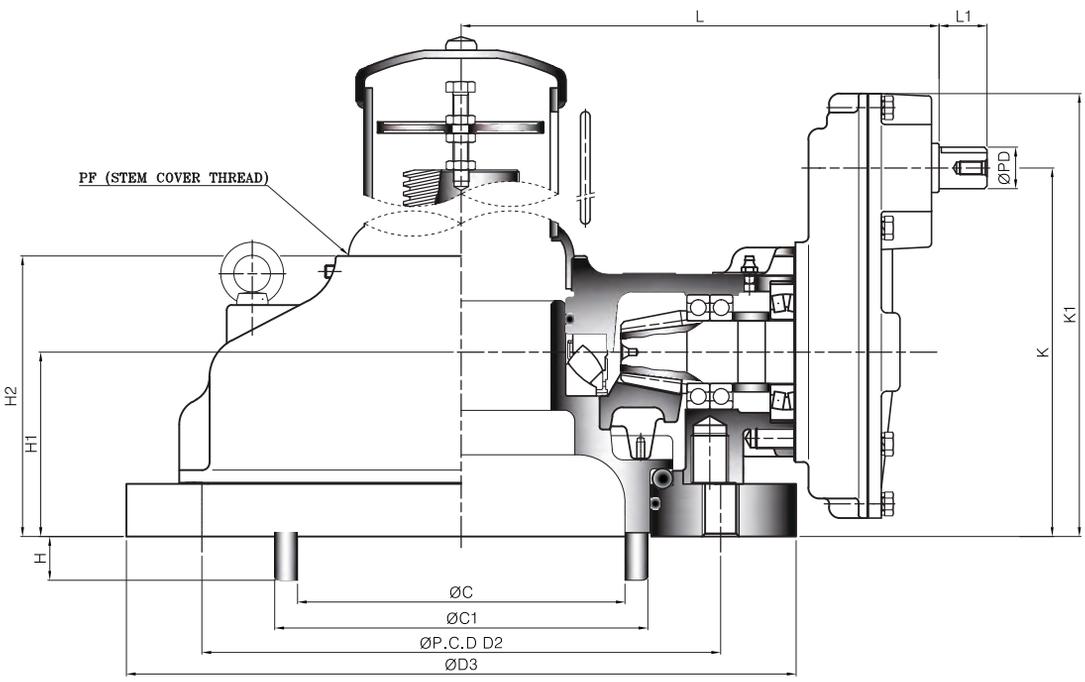

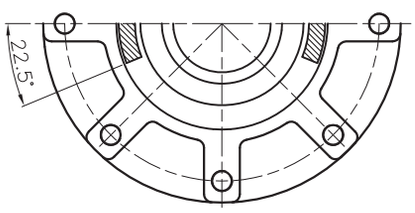

TYPE - A

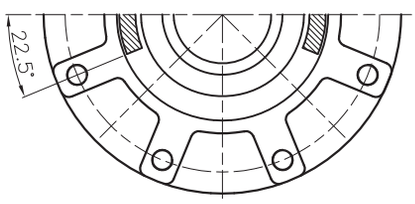

TYPE - B

Dimension >>>

UNIT : mm

MODEL \ DIM	BASE PART					CLAMP PART			EXTERNAL PART					INPUT SHAFT PART			HAND WHEEL	STEM COVER
	TYPE	FLANGE	P.C.D ØD2	P.C.D N–H–DP	ØD3	ØC	ØC1	H	H1	H2	K	K1	L	L1	ØPD	KEY		
SB–VS10C–1S	A	F–14	140	8–3/8"–16UNC	190	74	87	10	72	96	151	194	174	34	26	8X7	250	PF2"
		F–16	165	8–1/2"–13UNC														
SB–VS20C–1S		F–16	165	8–1/2"–13UNC	220	91	105	11	73	100	151	195	184					PF2–1/2"
		(F–20)	193.8															
SB–V0C–1S		F–16	165	8–1/2"–13UNC	220	110	126	14	75	115	154	197	202	34	26	8X7	300	
		(F–20)	193.8															
SB–V1C–1S		(F–20)	193.8	8–1/2"–13UNC	300	128	146	17	90	132	169	212	214					PF3"
		F–25	254	8–5/8"–11UNC														
SB–V2C–1S	B	F–25	254	8–5/8"–11UNC	350	146	166	19	107	152	200	248	237	34	26	8X7	400	PF3–1/2"
		F–30	298	8–3/4"–10UNC														
SB–V3C–1S		F–30	298	8–3/4"–10UNC	415	173	197	21	110	158	204	251	257				500	PF4"
		F–35	356	8–1"–8UNC														
SB–V35C–1S		F–35	356	8–1"–8UNC	475	220	247	23	122	184	249	305	333	34	32	10X8	630	PF5"
		F–40	406	8–1 1/4"–7UNC														
SB–V4C–1S		F–35	356	8–1"–8UNC	475	258	292	25	145	202	260	317	358					PF6"
		F–40	406	8–1 1/4"–7UNC														
SB–V5C–1S		F–35	356	8–1"–8UNC	480	266	306	27	172	242	293	350	401				710	
		F–40	406	8–1 1/4"–7UNC														

Size and component specification in this catalogue are subject to change without prior notice for quality improvement.
* Mark has been changed and updated.

Feature >>>

- This series suitable for use with Gate & Globe type valve. Also sluice gates and any other type requiring linear motion for thrust and torque applications.
- Unique Top Entry Replaceable Stem Nut. High Tensile Aluminum bronze material providing corrosion and abrasion resistance.
- Castings are Ductile Iron, class 65-45-12 providing high strength and impact resistance.
- Heavy duty roller bearings supporting both radial & axial thrust loads.
- Gears are Machine cut, heat treated and ground for optimum operation Units are completely O-Ring Sealed suitable for temporary submergence to meet IP67 class.
- Many options, such as hand wheels, chain wheels, stem covers, position dial indicators are available.

MOUNTING BASE

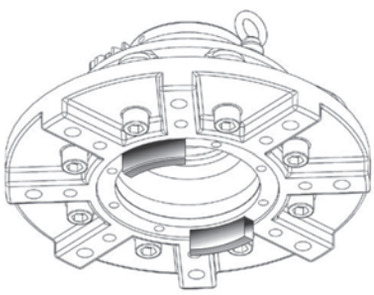

DIAL INDICATOR

A unique local position dial indicator is available. It is graduated in percent from 0% (close) to 100% (open).

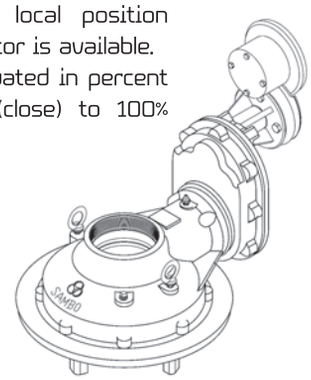

M·O·V OPTION

Bevel Gear can be provided with Motor actuator input flanges to accept standard ISO Mounting Base.

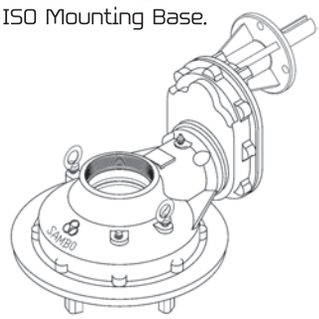

Selection Chart for Manual Operation >>>

SIZE / MODEL	GEAR RATIO	MAX. STEM ACCEPTANCE	MAX. TORQUE CAPACITY		WEIGHT
			N–m	Ft . lbf	Kg
SB–VS10C–1S	5 : 1	42	330	243	9.5
SB–VS20C–1S	6 : 1	50	555	409	12.5
SB–V0C–1S	6.5 : 1	60	900	663	25
SB–V1C–1S	7 : 1	69	1470	1084	32
SB–V2C–1S	10.13 : 1	79	2250	1659	45
SB–V3C–1S	12.66 : 1	97	3750	2765	60
SB–V35C–1S	16.5 : 1	115	5250	3872	95
SB–V4C–1S	18 : 1	130	7800	5752	120
SB–V5C–1S	19.5 : 1	145	11700	8629	135

Size and component specification in this catalogue are subject to change without prior notice for quality improvement.
* Mark has been changed and updated.

STANDARD TYPE-D Multiple Input Shaft
Thrust & Torque Vertical Input

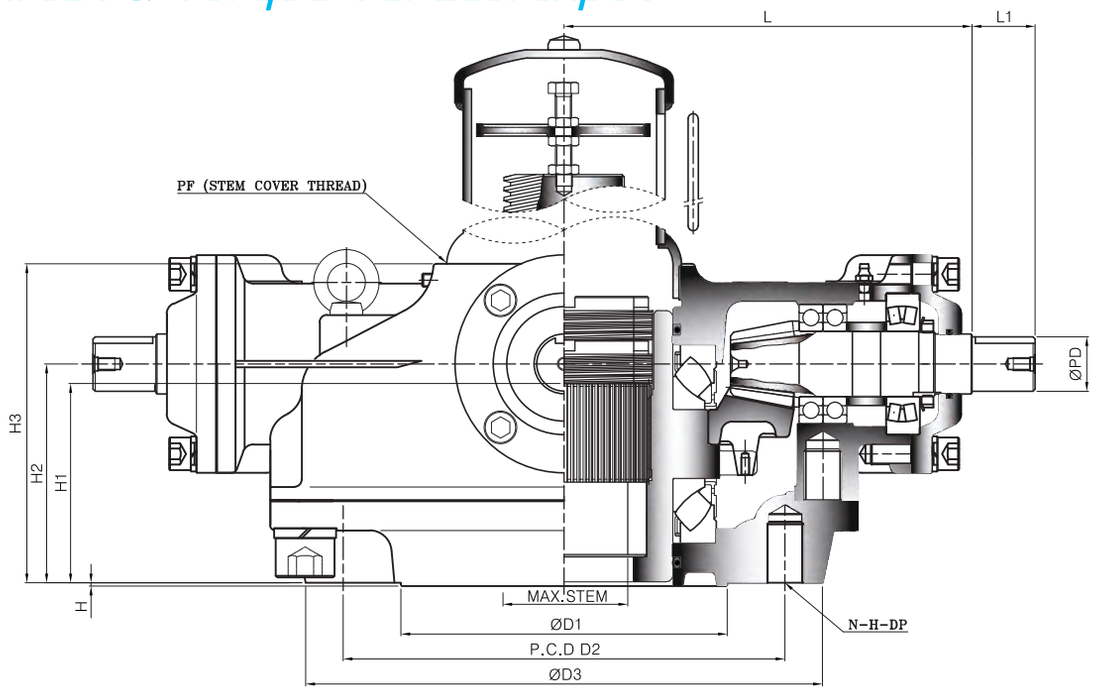

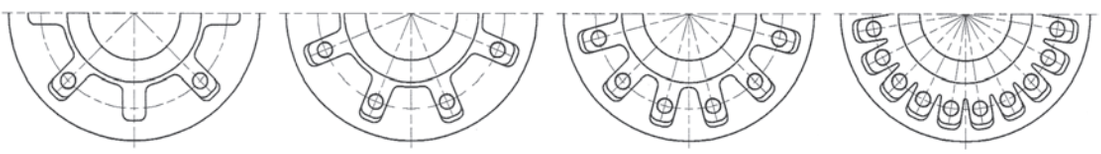

TYPE - A TYPE - B TYPE - C TYPE - D

Dimension >>>

UNIT : mm

MODEL \ DIM	BASE PART							EXTERNAL PART				INPUT SHAFT PART			HAND WHEEL	STEM COVER
	TYPE	FLANGE	ØD1	P.C.D ØD2	P.C.D N-H-DP	ØD3	H	H1	H2	H3	L	L1	ØPD	KEY		
SB-VS10W	A	F-10	70	102	4-M10-15	125	3	56	71	95	121	34	26	8X7	250	PF2"
SB-VS20W		F-12	85	125	4-M12-18	150		63	78.5	106	131				300	PF2-1/2"
SB-V0W		F-14	100	140	4-M16-24	175		72	81	121	154.5	34	32	10X8	400	
SB-V1W		F-16	130	165	4-M20-30	210		84	98	140	167				500	PF3"
SB-V2W	B	F-16 (F-20)	140	205	8-M16-24	250	3	95	115	159.5	188	34	32	10X8	630	PF3-1/2"
SB-V3W		F-25	200	254	8-M16-24	300		102	119	166.5	208				710	PF4"
SB-V35W		F-30	230	298	8-M20-30	350		122	138	195	266	44	38	12X8	800	PF5"
SB-V4W		F-35	260	356	8-M30-45	410		133	150	209	291				900	PF6"
SB-V5W		F-40	300	406	8-M36-55	475		161	177	245	313					
SB-V55W		F-40	300	406	8-M36-55	475		171	192	261	333					
SB-V6W		F-40	300	406	8-M36-55	475		185	201	283	381	58	50	16X10	1000	PF8"
SB-V7W	C	F-48	370	483	12-M36-55	560	5	206	222	309	409	58	50	16X10	1000	PF8"
SB-V75W		F-48	370	483	12-M36-55	560		221	248	340	441	58	50	16X10	1000	PF10"
SB-V8W		F-48	370	483	12-M36-55	560		233	259	352	472					
SB-V85W	D	F-60	470	603	20-M36-55	700	5	248	278	373	525	58	50	16X10	1000	PF12"
SB-V9W		F-60	470	603	20-M36-55	700		263	295	398	591	58	50	16X10	1000	PF12"
* SB-V10W		F-80	670	813	20-M42-63	900		378	375	490	664					

Size and component specification in this catalogue are subject to change without prior notice for quality improvement.
* Mark has been changed and updated.

Dual Gear Actuator Type (Manual Dial Indicator) >>>

: Typical Arrangement for Two Spindles Application

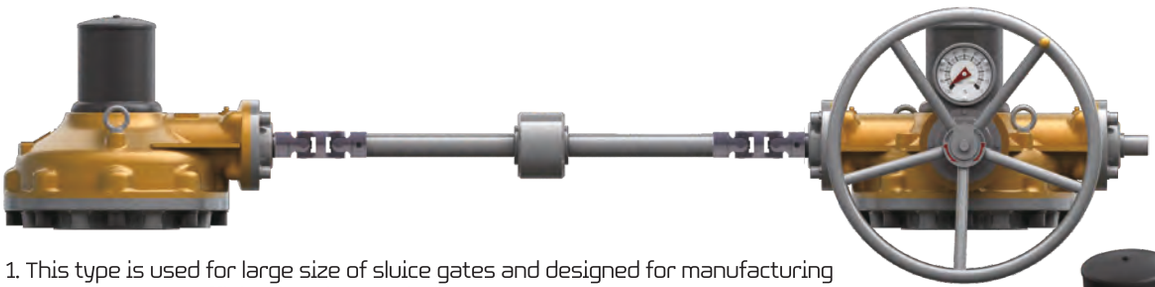

1. This type is used for large size of sluice gates and designed for manufacturing type to operate efficiently using 2 spindles.
2. Local dial position indicator provides clear indication of gate position.
3. Sambo can provide suitable interconnecting shafts and couplings if required. (Customer must state the center distance between the gate stems.)

Dual Gear Actuator Type (Electric Actuators) >>>

: Typical Arrangement for Two Spindles Application

1. This type is used for large size of sluice gates and designed for manufacturing type to operate efficiently using 2 spindles.
2. Sambo can provide suitable interconnecting shafts and couplings if required. (Customer must state the center distance between the gate stems.)

Selection Chart for Manual Operation >>>

SIZE / MODEL	GEAR RATIO	MAX. STEM ACCEPTANCE		BASE MOUNTING OPTION & STANDARD	MAX. THRUST CAPACITY		MAX. TORQUE CAPACITY		WEIGHT
		TW	KEY		KN	lbf	N–m	Ft . lbf	Kg
SB–VS10W	2.5 : 1	30	22 (8X7)	F–07, F–10	75.5	16970	220	162	10
SB–VS20W	3 : 1	40	32 (10X8)	F–10, F–12	113	25400	370	273	13
SB–V0W	3.25 : 1	46	38 (12X8)	F–10, F–12, F–14	127	28550	600	442	19
SB–V1W	3.5 : 1	55	45 (14X9)	F–14, F–16	141	31700	980	723	25
SB–V2W	4 : 1	62	52 (16X10)	F–14, F–16, (F–20)	190	42710	1500	1106	37
SB–V3W	5 : 1	72	60 (18X11)	F–16, (F–20), F–25	288	64750	2500	1844	49
SB–V35W	5.5 : 1	85	72 (20X12)	F–25, F–30	350	78680	3500	2581	84
SB–V4W	6 : 1	98	84 (22X14)	F–25, F–30, F–35	400	89920	5200	3835	106
SB–V5W	6.56 : 1	110	95 (28X16)	F–25, F–30, F–35, F–40	510	114650	7800	5753	159
SB–V55W	7 : 1	120	105 (28X16)	F–30, F–35, F–40	1500	337210	10400	7671	210
SB–V6W	7 : 1	130	115 (32X18)	F–30, F–35, F–40	2310	519300	13000	9588	263
SB–V7W	7.56 : 1	150	130 (36X20)	F–35, F–40, F–48	2500	562020	17600	12981	330
SB–V75W	8 : 1	160	140 (36X20)	F–40, F–48	3450	775590	21000	15489	473
SB–V8W	8 : 1	180	160 (40X22)	F–40, F–48	4100	921700	32000	23602	488
SB–V85W	8 : 1	190	170 (40X22)	F–48, F–60	5150	1157760	40000	29502	550
SB–V9W	8 : 1	200	180 (45X25)	F–48, F–60	5450	1225180	55000	40566	758
* SB–V10W	8 : 1	220	200 (50X28)	F–60, F–80	7300	1641105	75000	55317	916

Size and component specification in this catalogue are subject to change without prior notice for quality improvement.
* Mark has been changed and updated.

STANDARD TYPE-D Multiple Input Shaft
Thrust & Torque Horizontal Input with Single Reduction Gear Attachment

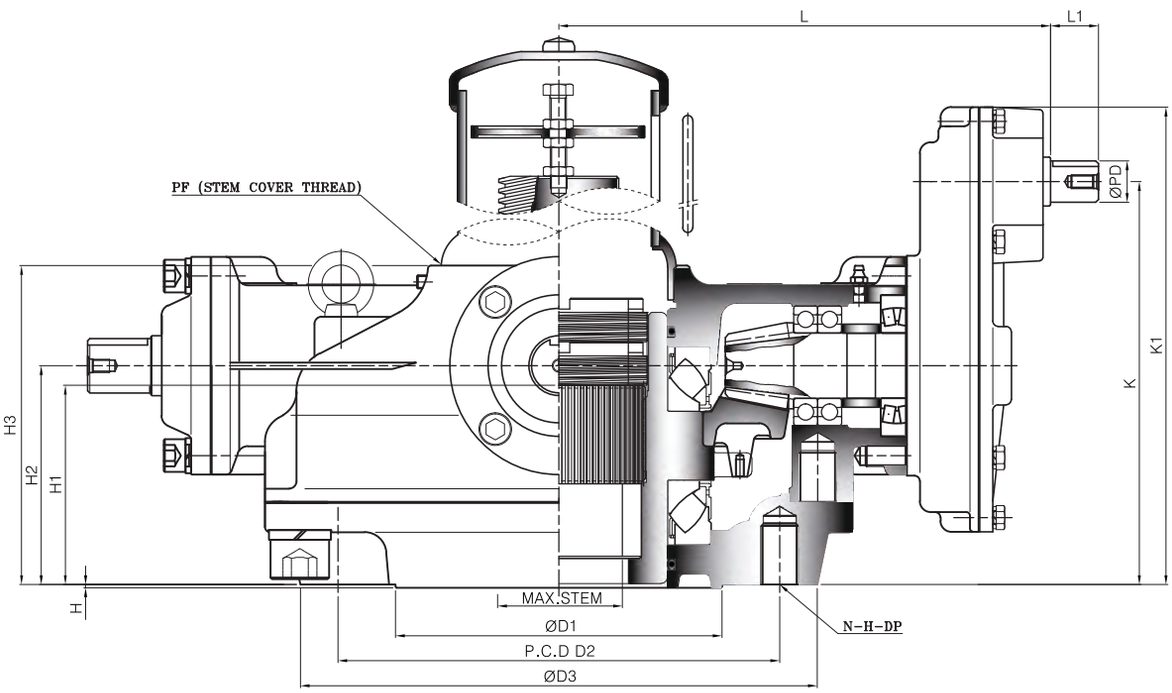

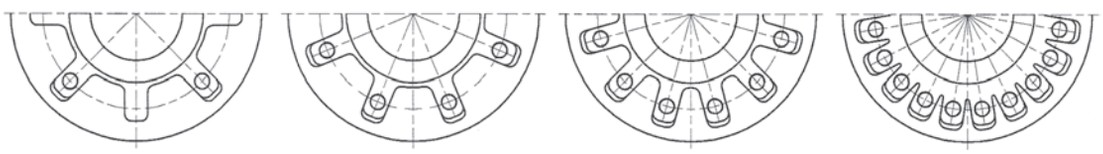

TYPE - A TYPE - B TYPE - C TYPE - D

Dimension >>>

UNIT : mm

DIM / MODEL	BASE PART							EXTERNAL PART						INPUT SHAFT PART			HAND WHEEL	STEM COVER
	TYPE	FLANGE	ØD1	P.C.D ØD2	P.C.D N-H-DP	ØD3	H	H1	H2	H3	K	K1	L	L1	ØPD	KEY		
SB-V0W-1S	A	F-14	100	140	4-M16-24	175	3	72	81	121	160	203	201.5	34	26	8X7	250	PF2-1/2"
SB-V1W-1S		F-16	130	165	4-M20-30	210		84	98	140	177	220	214				300	PF3"
SB-V2W-1S	B	F-16 (F-20)	140	205	8-M16-24	250	3	95	115	159.5	208	256	236.5	34	26	8X7	400	PF3-1/2"
SB-V3W-1S		F-25	200	254	8-M16-24	300		102	119	166.5	212	260	256.5				500	PF4"
SB-V35W-1S		F-30	230	298	8-M20-30	350		122	138	195	259	316	333	34	32	10X8	630	PF5"
SB-V4W-1S		F-35	260	356	8-M30-45	410		133	150	209	271	328	358					PF6"
SB-V5W-1S		F-40	300	406	8-M36-55	475		161	177	245	322	384.5	387				710	PF6"
SB-V55W-1S		F-40	300	406	8-M36-55	475		171	192	261	337	399.5	407					
SB-V6W-1S		F-40	300	406	8-M36-55	475		185	201	283	370	439	472	44	38	12X8	800	PF8"
SB-V7W-1S	C	F-48	370	483	12-M36-55	560	5	206	222	309	391	459	497	44	38	12X8	900	PF8"
SB-V75W-1S		F-48	370	483	12-M36-55	560		221	248	340	478	564	620	58	50	16X10	1000	PF10"
SB-V8W-1S		F-48	370	483	12-M36-55	560		233	259	352	489	575	651					
SB-V85W-1S	D	F-60	470	603	20-M36-55	700	5	248	278	373	508	594	695	58	50	16X10	1000	PF12"
SB-V9W-1S		F-60	470	603	20-M36-55	700		263	295	398	580	696	821	58	50	16X10	1000	PF12"
* SB-V10W-1S		F-80	670	813	20-M42-63	900		378	375	490	659	775	886					

Size and component specification in this catalogue are subject to change without prior notice for quality improvement.
* Mark has been changed and updated.

Dual Gear Actuator Type (Manual) >>>

: Typical Arrangement for Two Spindles Application

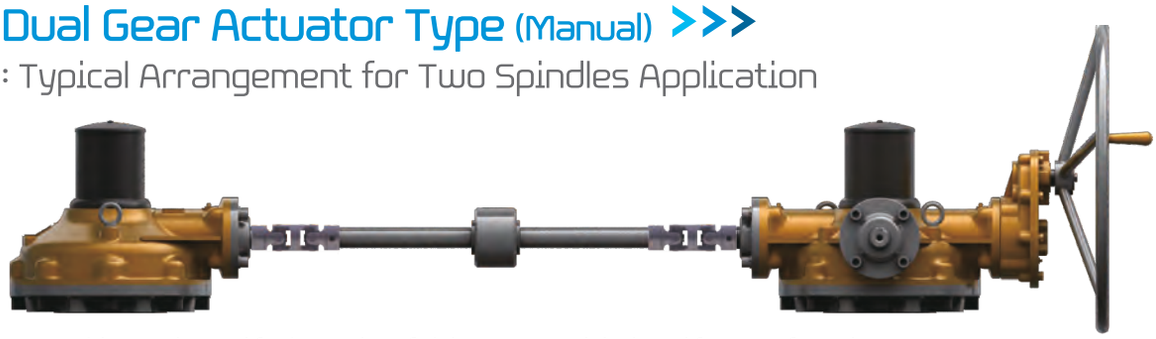

1. This type is used for large size of sluice gates and designed for manufacturing type to operate efficiently using 2 spindles.
2. Sambo can provide suitable interconnecting shafts and couplings if required. (Customer must state the center distance between the gate stems.)

Global Leader SAMBO GEAR ACTUATORS for Industrial Valves

The World's Highest Quality!

Dual Gear Actuator Type (Electric Actuators) >>>

: Typical Arrangement for Two Spindles Application

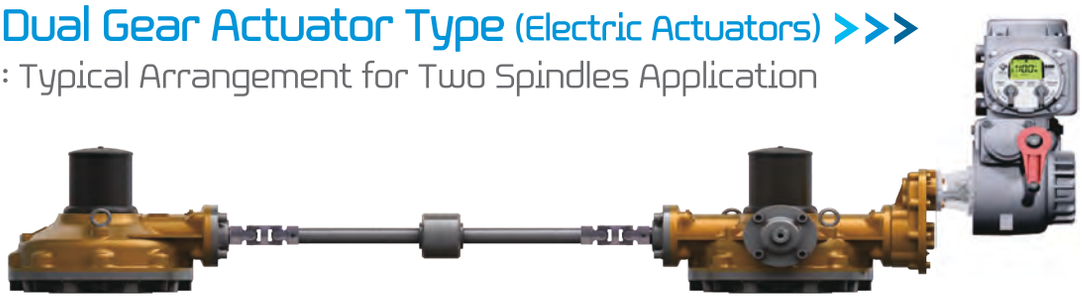

1. This type is used for large size of sluice gates and designed for manufacturing type to operate efficiently using 2 spindles.
2. Sambo can provide suitable interconnecting shafts and couplings if required. (Customer must state the center distance between the gate stems.)

Selection Chart for Manual Operation >>>

SIZE / MODEL	GEAR RATIO	MAX. STEM ACCEPTANCE		BASE MOUNTING OPTION & STANDARD	MAX. THRUST CAPACITY		MAX. TORQUE CAPACITY		WEIGHT
		TW	KEY		KN	lbf	N–m	Ft . lbf	Kg
SB–V0W–1S	6.5 : 1	46	38 (12X8)	F–10, F–12, F–14	127	28550	600	442	23
SB–V1W–1S	7 : 1	55	45 (14X9)	F–14, F–16	141	31700	980	723	29
SB–V2W–1S	10.13 : 1	62	52 (16X10)	F–14, F–16, (F–20)	190	42710	1500	1106	45
SB–V3W–1S	12.66 : 1	72	60 (18X11)	F–16, (F–20), F–25	288	64750	2500	1844	57
SB–V35W–1S	16.5 : 1	85	72 (20X12)	F–25, F–30	350	78680	3500	2581	97
SB–V4W–1S	18 : 1	98	84 (22X14)	F–25, F–30, F–35	400	89920	5200	3835	118
SB–V5W–1S	22.94 : 1	110	95 (28X16)	F–25, F–30, F–35, F–40	510	114650	7800	5753	171
SB–V55W–1S	24.5 : 1	120	105 (28X16)	F–30, F–35, F–40	1500	337210	10400	7671	223
SB–V6W–1S	28 : 1	130	115 (32X18)	F–30, F–35, F–40	2310	519300	13000	9588	291
SB–V7W–1S	30.22 : 1	150	130 (36X20)	F–35, F–40, F–48	2500	562020	17600	12981	358
SB–V75W–1S	40 : 1	160	140 (36X20)	F–40, F–48	3450	775590	21000	15489	545
SB–V8W–1S	40 : 1	180	160 (40X22)	F–40, F–48	4100	921700	32000	23602	560
SB–V85W–1S	40 : 1	190	170 (40X22)	F–48, F–60	5150	1157760	40000	29502	622
SB–V9W–1S	40 : 1	200	180 (45X25)	F–48, F–60	5450	1225180	55000	40566	855
* SB–V10W–1S	40 : 1	220	200 (50X28)	F–60, F–80	7300	1641105	75000	55317	1013

Size and component specification in this catalogue are subject to change without prior notice for quality improvement.
* Mark has been changed and updated.

STANDARD TYPE-D Multiple Input Shaft
Thrust & Torque Horizontal Input with Double Reduction Gear Attachment

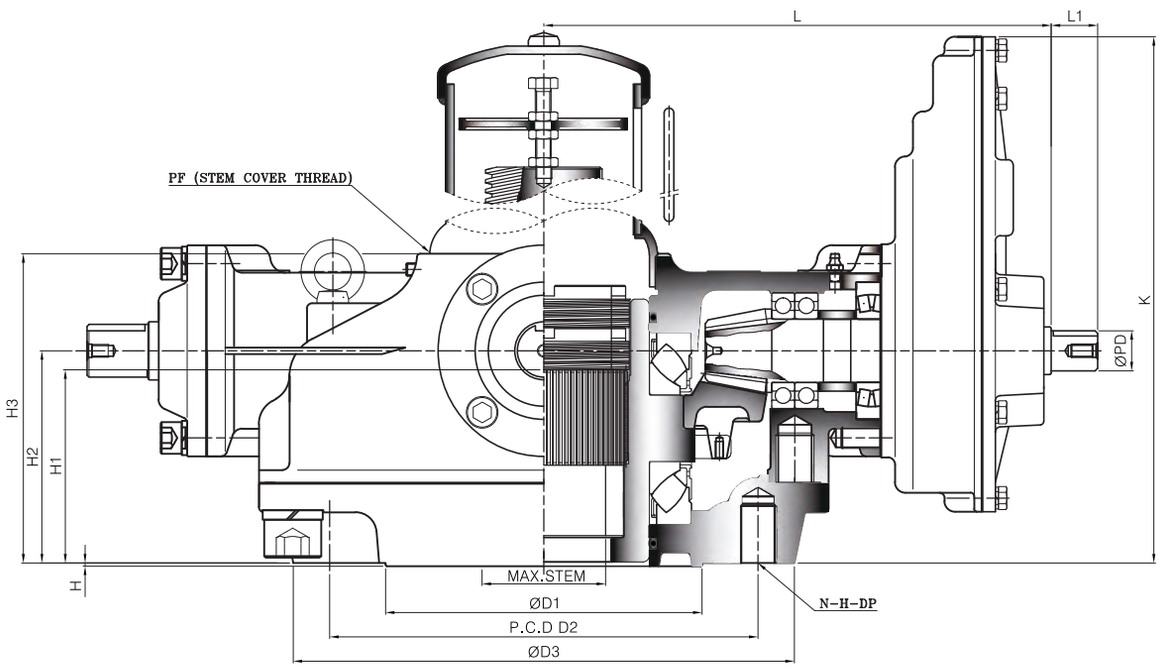

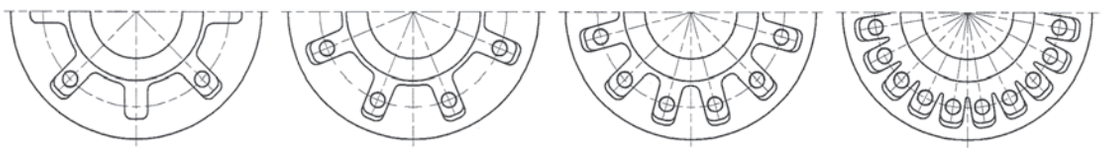

TYPE - A TYPE - B TYPE - C TYPE - D

Dimension >>>

UNIT : mm

DIM / MODEL	BASE PART							EXTERNAL PART					INPUT SHAFT PART			HAND WHEEL	STEM COVER
	TYPE	FLANGE	ØD1	P.C.D ØD2	P.C.D N-H-DP	ØD3	H	H1	H2	H3	K	L	L1	ØPD	KEY		
* SB-V0W-1SD	A	F-14	100	140	4-M16-24	175	3	72	81	121	225	231	34	26	8X7	250	PF2-1/2"
* SB-V1W-1SD		F-16	130	165	4-M20-30	210		84	98	140	242	243.5				300	PF3"
SB-V2W-1SD	B	F-16 (F-20)	140	205	8-M16-24	250	3	95	115	159.5	259	260.5	34	26	8X7	400	PF3-1/2"
SB-V3W-1SD		F-25	200	254	8-M16-24	300		102	119	166.5	263	280.5				500	PF4"
SB-V35W-1SD		F-30	230	298	8-M20-30	350		122	138	195	333	369	34	32	10X8	630	PF5"
SB-V4W-1SD		F-35	260	356	8-M30-45	410		133	150	209	345	394					PF6"
SB-V5W-1SD		F-40	300	406	8-M36-55	475		161	177	245	426	426				710	PF6"
SB-V55W-1SD		F-40	300	406	8-M36-55	475		171	192	261	441	446					
SB-V6W-1SD		F-40	300	406	8-M36-55	475		185	201	283	498.5	498	44	38	12X8	800	PF8"
SB-V7W-1SD	C	F-48	370	483	12-M36-55	560	5	206	222	309	519.5	526	44	38	12X8	900	PF8"
SB-V75W-1SD		F-48	370	483	12-M36-55	560		221	248	340	628	666	58	50	16X10	1000	PF10"
SB-V8W-1SD		F-48	370	483	12-M36-55	560		233	259	352	638	697					
SB-V85W-1SD	D	F-60	470	603	20-M36-55	700	5	248	278	373	658	741	58	50	16X10	1000	PF12"
SB-V9W-1SD		F-60	470	603	20-M36-55	700		263	295	398	784	876	58	50	16X10	1000	PF12"
* SB-V10W-1SD		F-80	670	813	20-M42-63	900		378	375	490	863	941					

Size and component specification in this catalogue are subject to change without prior notice for quality improvement.
* Mark has been changed and updated.

Dual Gear Actuator Type (Manual Dial Indicator) >>>

: Typical Arrangement for Two Spindles Application

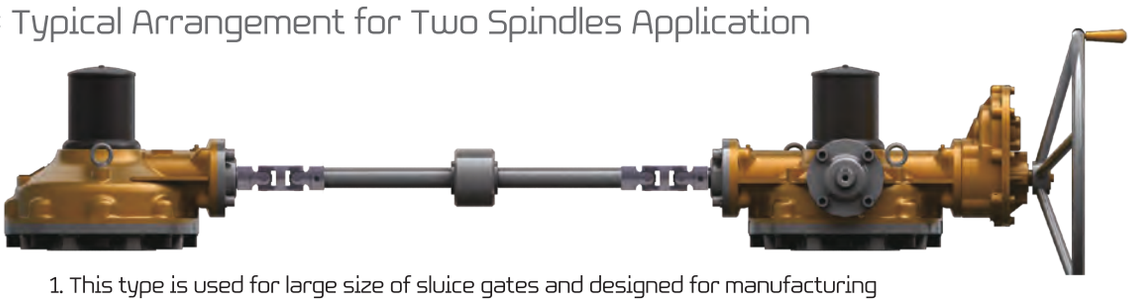

1. This type is used for large size of sluice gates and designed for manufacturing type to operate efficiently using 2 spindles.
2. Sambo can provide suitable interconnecting shafts and couplings if required. (Customer must state the center distance between the gate stems.)

Global Leader SAMBO GEAR ACTUATORS for Industrial Valves

The World's Highest Quality!

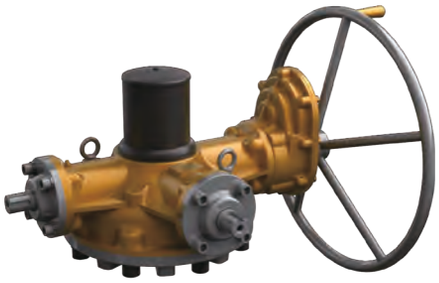

Dual Gear Actuator Type (Electric Actuators) >>>

: Typical Arrangement for Two Spindles Application

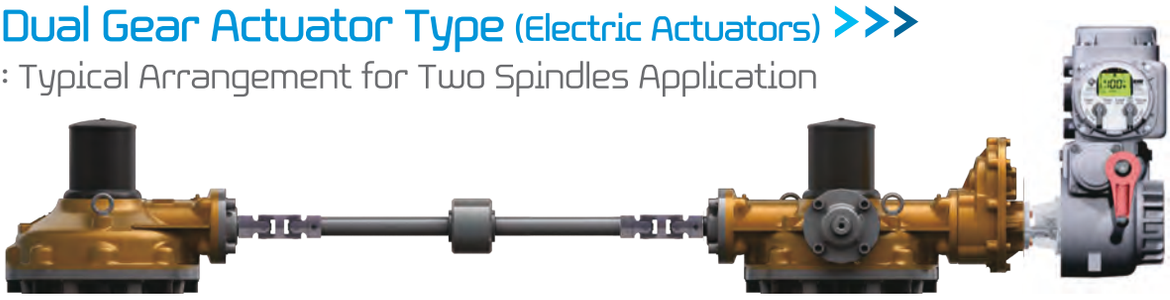

1. This type is used for large size of sluice gates and designed for manufacturing type to operate efficiently using 2 spindles.
2. Sambo can provide suitable interconnecting shafts and couplings if required. (Customer must state the center distance between the gate stems.)

Selection Chart for Manual Operation >>>

SIZE / MODEL	MAX. GEAR RATIO (Changeable)	MAX. STEM ACCEPTANCE		BASE MOUNTING OPTION & STANDARD	MAX. THRUST CAPACITY		MAX. TORQUE CAPACITY		WEIGHT
		TW	KEY		KN	lbf	N–m	Ft . lbf	Kg
* SB–V0W–1SD	20.86 : 1	46	38 (12X8)	F–10, F–12, F–14	127	28550	600	442	27
* SB–V1W–1SD	22.46 : 1	55	45 (14X9)	F–14, F–16	141	31700	980	723	33
SB–V2W–1SD	25.67 : 1	62	52 (16X10)	F–14, F–16, (F–20)	190	42710	1500	1106	46
SB–V3W–1SD	32.08 : 1	72	60 (18X11)	F–16, (F–20), F–25	288	64750	2500	1844	58
SB–V35W–1SD	49.5 : 1	85	72 (20X12)	F–25, F–30	350	78680	3500	2581	101
SB–V4W–1SD	54 : 1	98	84 (22X14)	F–25, F–30, F–35	400	89920	5200	3835	122
SB–V5W–1SD	80.31 : 1	110	95 (28X16)	F–25, F–30, F–35, F–40	510	114650	7800	5753	176
SB–V55W–1SD	85.75 : 1	120	105 (28X16)	F–30, F–35, F–40	1500	337210	10400	7671	227
SB–V6W–1SD	112 : 1	130	115 (32X18)	F–30, F–35, F–40	2310	519300	13000	9588	305
SB–V7W–1SD	120.88 : 1	150	130 (36X20)	F–35, F–40, F–48	2500	562020	17600	12981	371
SB–V75W–1SD	200 : 1	160	140 (36X20)	F–40, F–48	3450	775590	21000	15489	573
SB–V8W–1SD	200 : 1	180	160 (40X22)	F–40, F–48	4100	921700	32000	23602	588
SB–V85W–1SD	200 : 1	190	170 (40X22)	F–48, F–60	5150	1157760	40000	29502	650
SB–V9W–1SD	200 : 1	200	180 (45X25)	F–48, F–60	5450	1225180	55000	40566	893
* SB–V10W–1SD	200 : 1	220	200 (50X28)	F–60, F–80	7300	1641105	75000	55317	1051

Size and component specification in this catalogue are subject to change without prior notice for quality improvement.
* Mark has been changed and updated.

STANDARD TYPE-E

High Load Thrust & Torque Horizontal Input

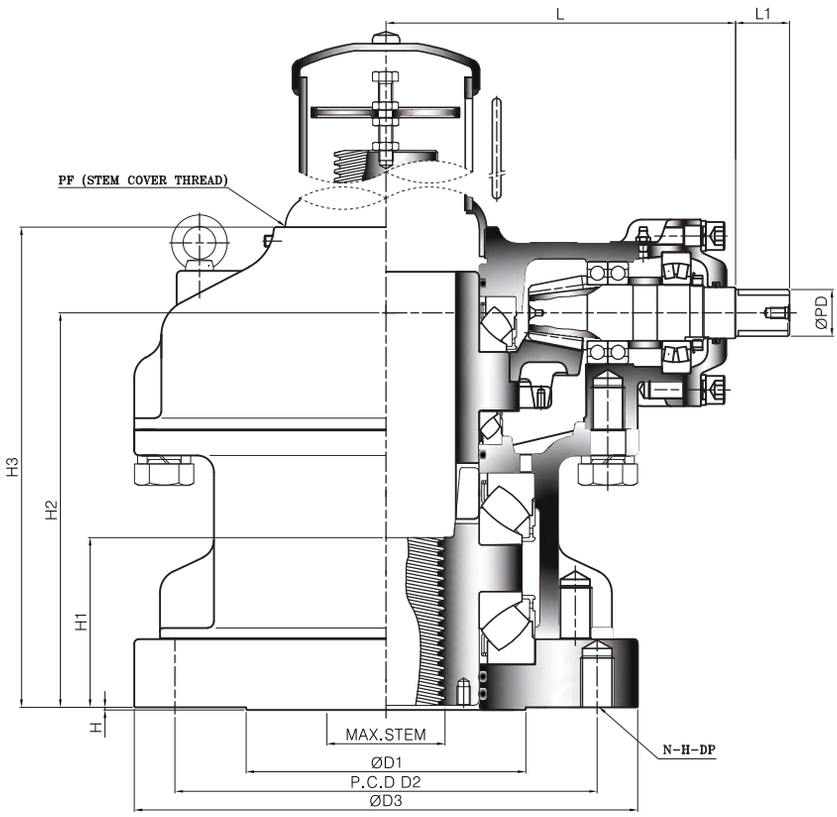

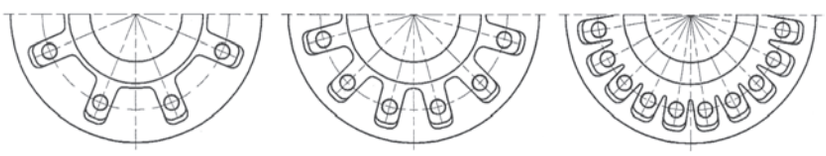

TYPE - B TYPE - C TYPE - D

Dimension >>>

UNIT : mm

DIM / MODEL	BASE PART							EXTERNAL PART				INPUT SHAFT PART			HAND WHEEL	STEM COVER
	TYPE	FLANGE	ØD1	P.C.D ØD2	P.C.D N-H-DP	ØD3	H	H1	H2	H3	L	L1	ØPD	KEY		
SB-V2H	B	F-25	200	254	8-M16-24	300	3	99	229	273.5	188	34	32	10X8	630	PF3-1/2"
SB-V3H		F-30	230	298	8-M20-30	350		118	263	310.5	208				710	PF4"
SB-V35H		F-35	260	356	8-M30-45	415		143	316	373	266	44	38	12X8	800	PF5"
SB-V4H								155	342	401	291				900	PF6"
SB-V5H		F-40	300	406	8-M36-55	475		172	376	444	313					
SB-V55H	C	F-48	370	483	12-M36-55	560	5	186	410	479	333	44	38	12X8	900	PF6"
SB-V6H		F-48	370	483	12-M36-55	560		197	429	511	381	58	50	16X10	1000	PF8"
SB-V7H		F-48						217	475	562	409					
SB-V75H	D	F-60	470	603	20-M36-55	700	5	229	505	597	441	58	50	16X10	1000	PF10"
SB-V8H		F-60	470	603	20-M36-55	700		242	540	635	472	58	50	16X10	1000	PF10"
SB-V85H		F-60						269	612	706	525					PF12"
* SB-V9H		F-80	670	813	20-M42-63	900		281	636	739	591	58	50	16X10	1000	
* SB-V10H		F-80						305	701	816	664					

Size and component specification in this catalogue are subject to change without prior notice for quality improvement.
* Mark has been changed and updated.

Disassembly flow chart of thrust bush for processing of stem thread

1. Remove base plate socket head cap screws and base plate.
2. Remove Gasket
3. Use eye-bolts from housing and thread into tapped holes on end of the drive bushing.
4. Lift drive bushing with lower roller bearing.
5. Remove roller bearing from drive bushing.
6. Thread bushing as required.
7. Add grease as necessary.
8. Re-assembly in reverse order.

Feature >>>

- This series suitable for extreme high thrust loads for use with Gate & Glove type valves. Also sluice gates and any other type requiring linear motion for high load thrust and torque applications.
- Bottom entry type stem nut. High tensile aluminum bronze material providing corrosion and abrasion resistance.
- Castings are Ductile Iron, class 65-45-12 providing high strength and impact resistance.
- Heavy duty roller bearings supporting both radial & axial thrust loads.
- Gears are Machine cut, heat treated and ground for optimum operation, Units are completely O-Ring Sealed suitable for temporary submergence to meet Ip67 class.
- Many options, such as hand wheels, chain wheels, stem covers, position dial indicators are available.

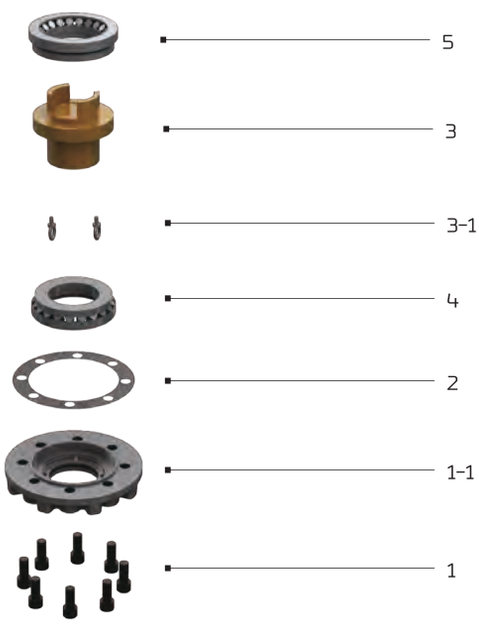

Global Leader SAMBO GEAR ACTUATORS for Industrial Valves

The World's Highest Quality!

Selection Chart for Manual Operation >>>

SIZE / MODEL	GEAR RATIO	MAX. STEM ACCEPTANCE		BASE MOUNTING OPTION & STANDARD	MAX. THRUST CAPACITY		MAX. TORQUE CAPACITY		WEIGHT
		TW	KEY		KN	lbf	N–m	Ft . lbf	Kg
SB–V2H	4 : 1	65	55 (16X10)	(F–20), F–25	1080	242800	2900	2139	62
SB–V3H	5 : 1	80	70 (20X12)	F–25, F–30	1710	384400	4500	3319	93
SB–V35H	5.5 : 1	95	85 (22X14)	F–25, F–30, F–35	2450	550800	7000	5163	158
SB–V4H	6 : 1	110	95 (25X14)		2900	651900	9800	7228	200
SB–V5H	6.56 : 1	130	115 (32X18)	F–30, F–35, F–40	3500	786800	15000	11063	264
SB–V55H	7 : 1	140	120 (32X18)	F–35, F–40, F–48	4200	944197	19000	14014	390
SB–V6H	7 : 1	150	130 (36X20)	F–35, F–40, F–48	4700	1056600	23000	16964	525
SB–V7H	7.56 : 1	170	150 (40X22)	F–48	5200	1169000	37000	27290	595
SB–V75H	8 : 1	190	170 (40X22)	F–48, F–60	6800	1528701	46000	33928	865
SB–V8H	8 : 1	215	185 (45X25)	F–48, F–60	7650	1719800	58000	42778	955
SB–V85H	8 : 1	225	195 (45X25)	F–48, F–60	9100	2045760	74000	54579	1220
* SB–V9H	8 : 1	240	215 (50X28)	F–60, F–80	9400	2113200	104000	76706	1797
* SB–V10H	8 : 1	270	240 (56X32)	F–60, F–80	11500	2585300	142000	104734	1969

Size and component specification in this catalogue are subject to change without prior notice for quality improvement.
* Mark has been changed and updated.

SAMBO

STANDARD TYPE-E

High Load Thrust & Torque Horizontal Input with Single Reduction Gear Attachment

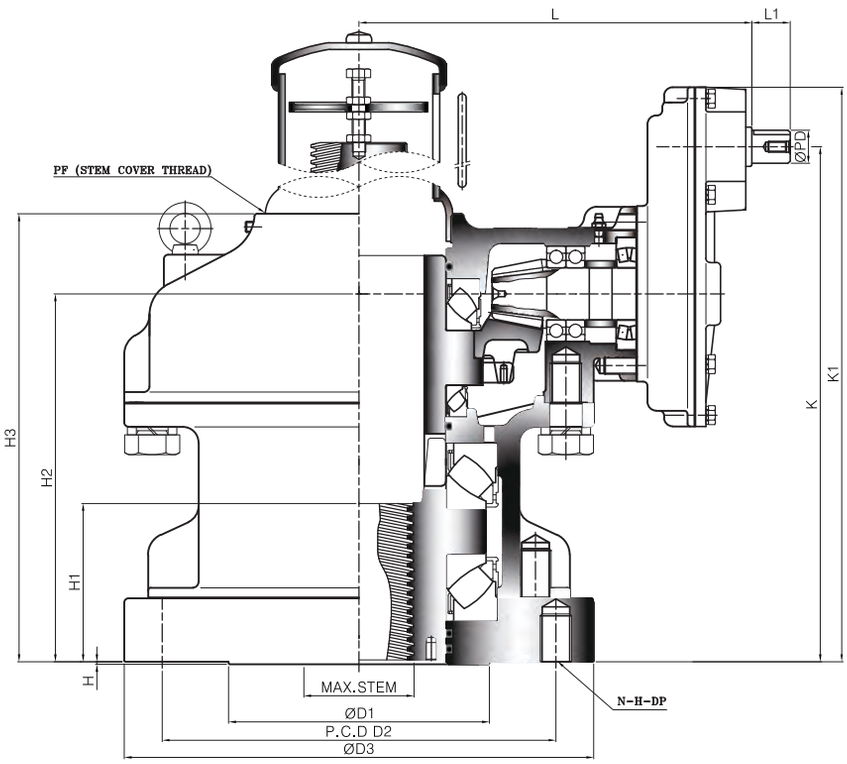

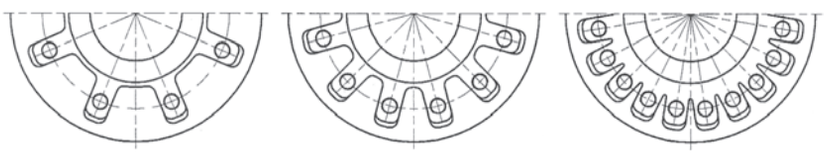

TYPE - B TYPE - C TYPE - D

Dimension >>>

UNIT : mm

DIM / MODEL	BASE PART							EXTERNAL PART						INPUT SHAFT PART			HAND WHEEL	STEM COVER
	TYPE	FLANGE	ØD1	P.C.D ØD2	P.C.D N-H-DP	ØD3	H	H1	H2	H3	K	K1	L	L1	ØPD	KEY		
SB-V2H-1S	B	F-25	200	254	8-M16-24	300	3	99	229	273.5	322	370	236.5	34	26	8X7	400	PF3-1/2"
SB-V3H-1S		F-30	230	298	8-M20-30	350		118	263	310	356	404	256.5				500	PF4"
SB-V35H-1S		F-35	260	356	8-M30-45	415		143	316	373	437	494	333	34	32	10X8	630	PF5"
SB-V4H-1S								155	342	401	463	520	358					PF6"
SB-V5H-1S		F-40	300	406	8-M36-55	475		172	376	444	521	584	387				710	
SB-V55H-1S	C	F-48	370	483	12-M36-55	560	5	186	410	479	555	617	407	34	32	10X8	800	PF6"
SB-V6H-1S		F-48	370	483	12-M36-55	560		197	429	511	598	666	472	44	38	12X8	800	PF8"
SB-V7H-1S		F-48						217	475	562	644	713	497				900	
SB-V75H-1S	D	F-60	470	603	20-M36-55	700	5	229	505	597	735	821	620	58	50	16X10	1000	PF10"
SB-V8H-1S		F-60						242	540	635	770	856	651	58	50	16X10	1000	PF10"
SB-V85H-1S		F-60						269	612	706	842	928	695					PF12"
* SB-V9H-1S		F-80	670	813	20-M42-63	900		281	636	739	920	1036	821	58	50	16X10	1000	
* SB-V10H-1S		F-80						305	701	816	985	1101	886					

Size and component specification in this catalogue are subject to change without prior notice for quality improvement.
* Mark has been changed and updated.

Disassembly flow chart of thrust bush for processing of stem thread

1. Remove base plate socket head cap screws and base plate.
2. Remove Gasket
3. Use eye-bolts from housing and thread into tapped holes on end of the drive bushing.
4. Lift drive bushing with lower roller bearing.
5. Remove roller bearing from drive bushing.
6. Thread bushing as required.
7. Add grease as necessary.
8. Re-assembly in reverse order.

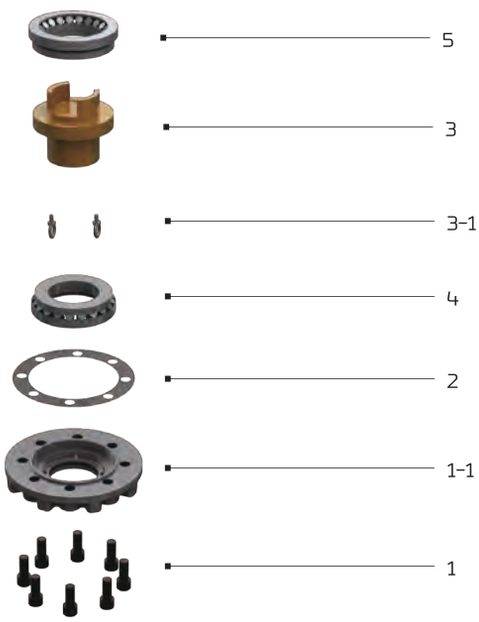

Feature >>>

- This series suitable for extreme high thrust loads for use with Gate & Glove type valves. Also sluice gates and any other type requiring linear motion for high load thrust and torque applications.
- Bottom entry type stem nut. High tensile aluminum bronze material providing corrosion and abrasion resistance.
- Castings are Ductile Iron, class 65-45-12 providing high strength and impact resistance.
- Heavy duty roller bearings supporting both radial & axial thrust loads.
- Gears are Machine cut, heat treated and ground for optimum operation, Units are completely O-Ring Sealed suitable for temporary submergence to meet Ip67 class.
- Many options, such as hand wheels, chain wheels, stem covers, position dial indicators are available.

Global Leader SAMBO GEAR ACTUATORS for Industrial Valves

The World's Highest Quality!

Selection Chart for Manual Operation >>>

SIZE / MODEL	GEAR RATIO	MAX. STEM ACCEPTANCE		BASE MOUNTING OPTION & STANDARD	MAX. THRUST CAPACITY		MAX. TORQUE CAPACITY		WEIGHT
		TW	KEY		KN	lbf	N–m	Ft . lbf	Kg
SB–V2H–1S	10.13 : 1	65	55 (16X10)	(F–20), F–25	1080	242800	2900	2139	70
SB–V3H–1S	12.66 : 1	80	70 (20X12)	F–25, F–30	1710	384400	4500	3319	101
SB–V35H–1S	16.5 : 1	95	85 (22X14)	F–25, F–30, F–35	2450	550800	7000	5163	170
SB–V4H–1S	18 : 1	110	95 (25X14)		2900	651900	9800	7228	212
SB–V5H–1S	22.94 : 1	130	115 (32X18)	F–30, F–35, F–40	3500	786800	15000	11063	276
SB–V55H–1S	24.5 : 1	140	120 (32X18)	F–35, F–40, F–48	4200	944197	19000	14014	403
SB–V6H–1S	28 : 1	150	130 (36X20)	F–35, F–40, F–48	4700	1056600	23000	16964	553
SB–V7H–1S	30.22 : 1	170	150 (40X22)	F–48	5200	1169000	37000	27290	623
SB–V75H–1S	40 : 1	190	170 (40X22)	F–48, F–60	6800	1528701	46000	33928	937
SB–V8H–1S	40 : 1	215	185 (45X25)	F–48, F–60	7650	1719800	58000	42778	1027
SB–V85H–1S	40 : 1	225	195 (45X25)	F–48, F–60	9100	2045760	74000	54579	1292
* SB–V9H–1S	40 : 1	240	215 (50X28)	F–60, F–80	9400	2113200	104000	76706	1894
* SB–V10H–1S	40 : 1	270	240 (56X32)	F–60, F–80	11500	2585300	142000	104734	2066

Size and component specification in this catalogue are subject to change without prior notice for quality improvement.
* Mark has been changed and updated.

STANDARD TYPE-E Twin Shaft

High Load Thrust & Torque (Twin Shaft) Horizontal Input with Single Reduction Gear Attachment

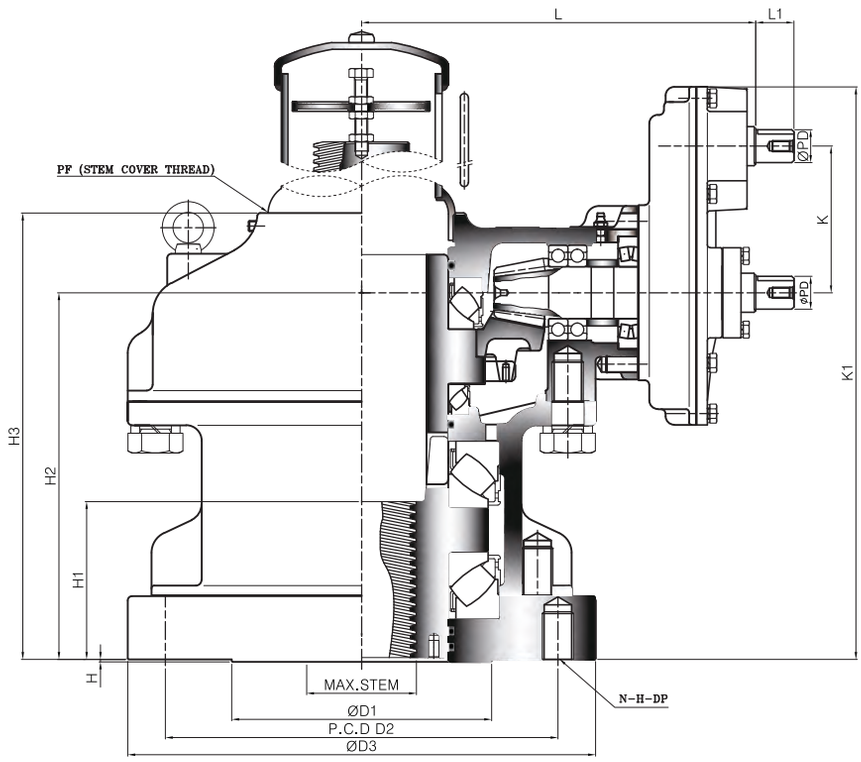

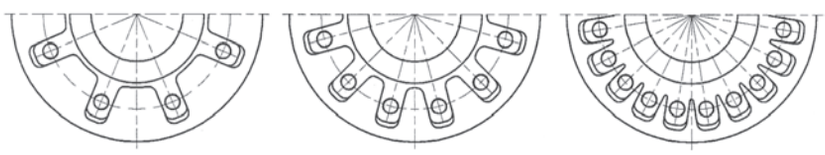

TYPE - B TYPE - C TYPE - D

Dimension >>>

UNIT : mm

MODEL \ DIM	BASE PART							EXTERNAL PART						INPUT SHAFT PART			HAND WHEEL	STEM COVER
	TYPE	FLANGE	ØD1	P.C.D ØD2	P.C.D N-H-DP	ØD3	H	H1	H2	H3	K	K1	L	L1	ØPD	KEY		
SB-V2H-1ST	B	F-25	200	254	8-M16-24	300	3	99	229	273.5	93	370	236.5	34	26	8X7	400	PF3-1/2"
SB-V3H-1ST		F-30	230	298	8-M20-30	350		118	263	310		404	256.5				500	PF4"
SB-V35H-1ST		F-35	260	356	8-M30-45	415		143	316	373	121	494	333	34	32	10X8	630	PF5"
SB-V4H-1ST								155	342	401		520	358					PF6"
SB-V5H-1ST		F-40	300	406	8-M36-55	475		172	376	444	145	584	387				710	
SB-V55H-1ST	C	F-48	370	483	12-M36-55	560	5	186	410	479	145	617	407	34	32	10X8	710	PF6"
SB-V6H-1ST		F-48	370	483	12-M36-55	560		197	429	511	169	666	472	44	38	12X8	800	PF8"
SB-V7H-1ST		F-48						217	475	562		713	497				900	
SB-V75H-1ST	D	F-60	470	603	20-M36-55	700	5	229	505	597	230	821	620	58	50	16X10	1000	PF10"
SB-V8H-1ST		F-60	470	603	20-M36-55	700		242	540	635		856	651	58	50	16X10	1000	
SB-V85H-1ST		F-60						269	612	706		928	695					PF12"
* SB-V9H-1ST		F-80	670	813	20-M42-63	900		281	636	739	284	1036	821	58	50	16X10	1000	
* SB-V10H-1ST		F-80						305	701	816		1101	886					

Size and component specification in this catalogue are subject to change without prior notice for quality improvement.
* Mark has been changed and updated.

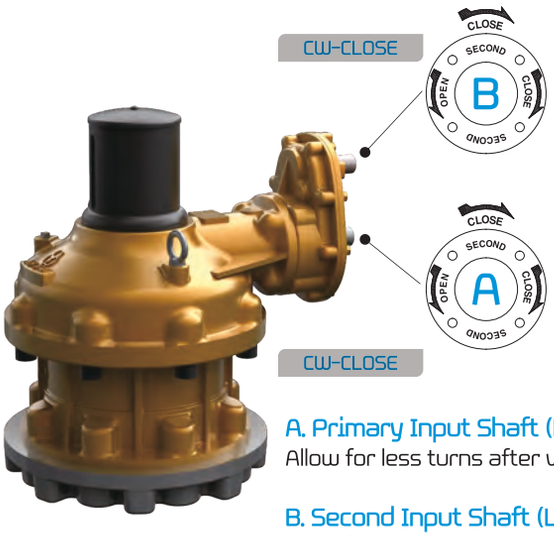

Disassembly flow chart of thrust bush for processing of stem thread

1. Remove base plate socket head cap screws and base plate.
2. Remove Gasket
3. Use eye-bolts from housing and thread into tapped holes on end of the drive bushing.
4. Lift drive bushing with lower roller bearing.
5. Remove roller bearing from drive bushing.
6. Thread bushing as required.
7. Add grease as necessary.
8. Re-assembly in reverse order.

A. Primary Input Shaft (High Speed Input Shaft)

Allow for less turns after valve has been unseating.

B. Second Input Shaft (Low Speed Input Shaft)

Provides maximum mechanical advantage for seating and unseating of valves.

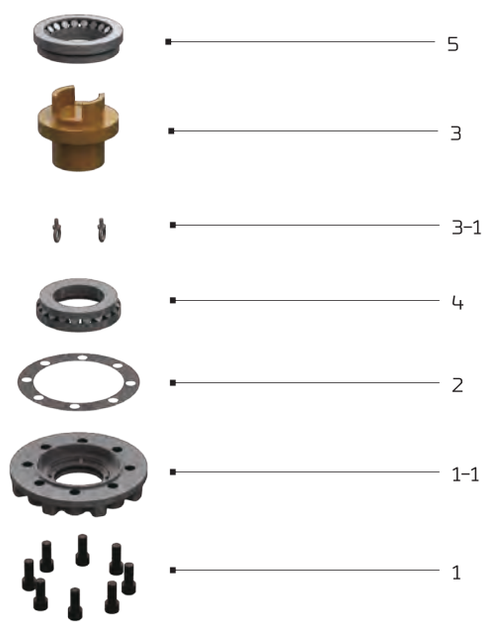

Feature >>>

- This series suitable for extreme high thrust loads for use with Gate & Glove type valves. Also sluice gates and any other type requiring linear motion for high load thrust and torque applications.
- Bottom entry type stem nut. High tensile aluminum bronze material providing corrosion and abrasion resistance.
- Castings are Ductile Iron, class 65-45-12 providing high strength and impact resistance.
- Heavy duty roller bearings supporting both radial & axial thrust loads.
- Gears are Machine cut, heat treated and ground for optimum operation, Units are completely O-Ring Sealed suitable for temporary submergence to meet Ip67 class.
- Many options, such as hand wheels, chain wheels, stem covers, position dial indicators are available.

Global Leader
SAMBO
GEAR ACTUATORS for Industrial Valves

The World's Highest Quality!

Selection Chart for Manual Operation >>>

SIZE / MODEL	GEAR RATIO		MAX. STEM ACCEPTANCE		BASE MOUNTING OPTION & STANDARD	MAX. THRUST CAPACITY		MAX. TORQUE CAPACITY		WEIGHT
	PRIMARY	SECOND	TW	KEY		KN	lbf	N-m	Ft . lbf	Kg
SB-V2H-1ST	4 : 1	10.13 : 1	65	55 (16X10)	(F-20), F-25	1080	242800	2900	2139	70
SB-V3H-1ST	5 : 1	12.66 : 1	80	70 (20X12)	F-25, F-30	1710	384400	4500	3319	101
SB-V35H-1ST	5.5 : 1	16.5 : 1	95	85 (22X14)	F-25, F-30, F-35	2450	550800	7000	5163	170
SB-V4H-1ST	6 : 1	18 : 1	110	95 (25X14)		2900	651900	9800	7228	212
SB-V5H-1ST	6.56 : 1	22.94 : 1	130	115 (32X18)	F-30, F-35, F-40	3500	786800	15000	11063	276
SB-V55H-1ST	7 : 1	24.5 : 1	140	120 (32X18)	F-35, F-40, F-48	4200	944197	19000	14014	403
SB-V6H-1ST	7 : 1	28 : 1	150	130 (36X20)	F-35, F-40, F-48	4700	1056600	23000	16964	553
SB-V7H-1ST	7.56 : 1	30.22 : 1	170	150 (40X22)	F-48	5200	1169000	37000	27290	623
SB-V75H-1ST	8 : 1	40 : 1	190	170 (40X22)	F-48, F-60	6800	1528701	46000	33928	937
SB-V8H-1ST	8 : 1	40 : 1	215	185 (45X25)	F-48, F-60	7650	1719800	58000	42778	1027
SB-V85H-1ST	8 : 1	40 : 1	225	195 (45X25)	F-48, F-60	9100	2045760	74000	54579	1292
* SB-V9H-1ST	8 : 1	40 : 1	240	215 (50X28)	F-60, F-80	9400	2113200	104000	76706	1894
* SB-V10H-1ST	8 : 1	40 : 1	270	240 (56X32)	F-60, F-80	11500	2585300	142000	104734	2066

Size and component specification in this catalogue are subject to change without prior notice for quality improvement.
* Mark has been changed and updated.

SAMBO

STANDARD TYPE-E

High Load Thrust & Torque Horizontal Input with Double Reduction Gear Attachment

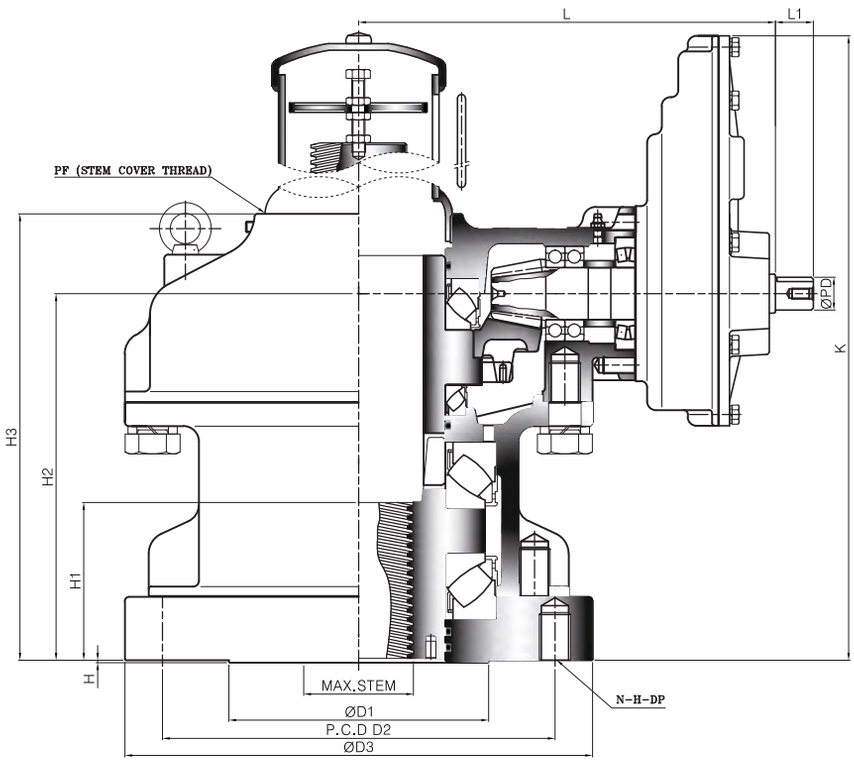

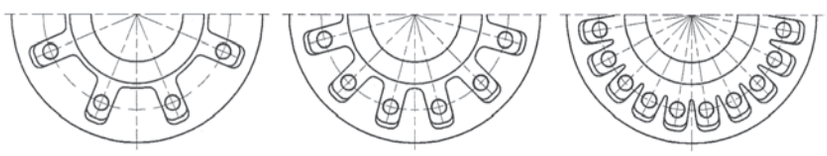

TYPE - B TYPE - C TYPE - D

Dimension >>>

UNIT : mm

MODEL \ DIM	BASE PART							EXTERNAL PART					INPUT SHAFT PART			HAND WHEEL	STEM COVER
	TYPE	FLANGE	ØD1	P.C.D ØD2	P.C.D N-H-DP	ØD3	H	H1	H2	H3	K	L	L1	ØPD	KEY		
SB-V2H-1SD	B	F-25	200	254	8-M16-24	300	3	99	229	273.5	373	260.5	34	26	8X7	400	PF3-1/2"
SB-V3H-1SD		F-30	230	298	8-M20-30	350		118	263	310	407	280.5				500	PF4"
SB-V35H-1SD		F-35	260	356	8-M30-45	415		143	316	373	511	369	34	32	10X8	630	PF5"
SB-V4H-1SD								155	342	401	537	394					PF6"
SB-V5H-1SD		F-40	300	406	8-M36-55	475		172	376	444	625	426				710	
SB-V55H-1SD	C	F-48	370	483	12-M36-55	560	5	186	410	479	659	446	34	32	10X8	800	PF6"
SB-V6H-1SD		F-48	370	483	12-M36-55	560		197	429	511	726.5	498	44	38	12X8	800	PF8"
SB-V7H-1SD		F-48						217	475	562	772.5	526				900	
SB-V75H-1SD	D	F-60	470	603	20-M36-55	700	5	229	505	597	885	666	58	50	16X10	1000	PF10"
SB-V8H-1SD		F-60	470	603	20-M36-55	700		242	540	635	920	697	58	50	16X10	1000	
SB-V85H-1SD		F-60						269	612	706	992	741					PF12"
* SB-V9H-1SD		F-80	670	813	20-M42-63	900		281	636	739	1124	876	58	50	16X10	1000	
* SB-V10H-1SD		F-80						305	701	816	1189	941					

Size and component specification in this catalogue are subject to change without prior notice for quality improvement.
* Mark has been changed and updated.

Disassembly flow chart of thrust bush for processing of stem thread

1. Remove base plate socket head cap screws and base plate.
2. Remove Gasket
3. Use eye-bolts from housing and thread into tapped holes on end of the drive bushing.
4. Lift drive bushing with lower roller bearing.
5. Remove roller bearing from drive bushing.
6. Thread bushing as required.
7. Add grease as necessary.
8. Re-assembly in reverse order.

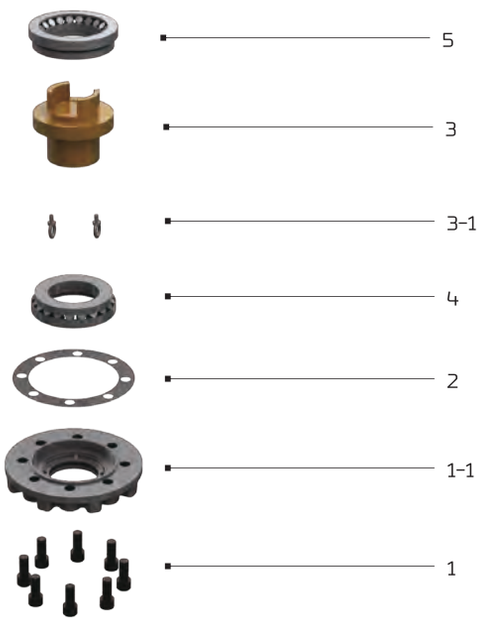

Feature >>>

- This series suitable for extreme high thrust loads for use with Gate & Glove type valves. Also sluice gates and any other type requiring linear motion for high load thrust and torque applications.
- Bottom entry type stem nut. High tensile aluminum bronze material providing corrosion and abrasion resistance.
- Castings are Ductile Iron, class 65-45-12 providing high strength and impact resistance.
- Heavy duty roller bearings supporting both radial & axial thrust loads.
- Gears are Machine cut, heat treated and ground for optimum operation, Units are completely O-Ring Sealed suitable for temporary submergence to meet Ip67 class.
- Many options, such as hand wheels, chain wheels, stem covers, position dial indicators are available.

Global Leader SAMBO GEAR ACTUATORS for Industrial Valves

The World's Highest Quality!

Selection Chart for Manual Operation >>>

SIZE / MODEL	MAX. GEAR RATIO (Changeable)	MAX. STEM ACCEPTANCE		BASE MOUNTING OPTION & STANDARD	MAX. THRUST CAPACITY		MAX. TORQUE CAPACITY		WEIGHT
		TW	KEY		KN	lbf	N–m	Ft . lbf	Kg
SB–V2H–1SD	25.67 : 1	65	55 (16X10)	(F–20), F–25	1080	242800	2900	2139	71
SB–V3H–1SD	32.08 : 1	80	70 (20X12)	F–25, F–30	1710	384400	4500	3319	102
SB–V35H–1SD	49.5 : 1	95	85 (22X14)	F–25, F–30, F–35	2450	550800	7000	5163	174
SB–V4H–1SD	54 : 1	110	95 (25X14)		2900	651900	9800	7228	216
SB–V5H–1SD	80.31 : 1	130	115 (32X18)	F–30, F–35, F–40	3500	786800	15000	11063	280
SB–V55H–1SD	85.75 : 1	140	120 (32X18)	F–35, F–40, F–48	4200	944197	19000	14014	407
SB–V6H–1SD	112 : 1	150	130 (36X20)	F–35, F–40, F–48	4700	1056600	23000	16964	566
SB–V7H–1SD	120.88 : 1	170	150 (40X22)	F–48	5200	1169000	37000	27290	636
SB–V75H–1SD	200 : 1	190	170 (40X22)	F–48, F–60	6800	1528701	46000	33928	965
SB–V8H–1SD	200 : 1	215	185 (45X25)	F–48, F–60	7650	1719800	58000	42778	1055
SB–V85H–1SD	200 : 1	225	195 (45X25)	F–48, F–60	9100	2045760	74000	54579	1320
* SB–V9H–1SD	200 : 1	240	215 (50X28)	F–60, F–80	9400	2113200	104000	76706	1932
* SB–V10H–1SD	200 : 1	270	240 (56X32)	F–60, F–80	11500	2585300	142000	104734	2104

Size and component specification in this catalogue are subject to change without prior notice for quality improvement.
* Mark has been changed and updated.

SAMBO

STANDARD TYPE-E Twin Shaft

High Load Thrust & Torque (Twin Shaft) Horizontal Input with Double Reduction Gear Attachment

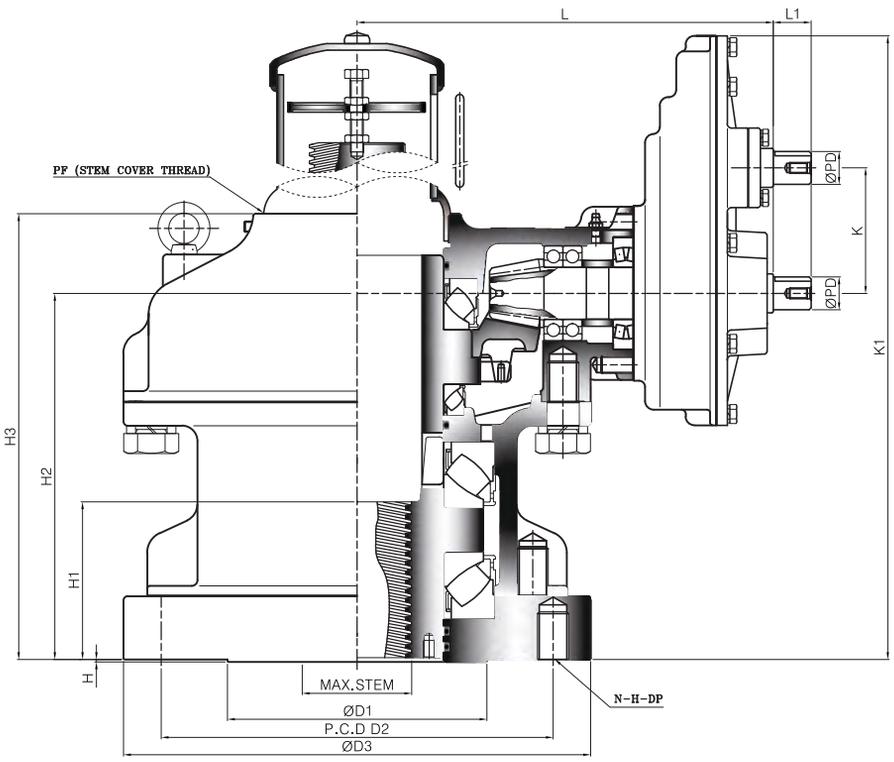

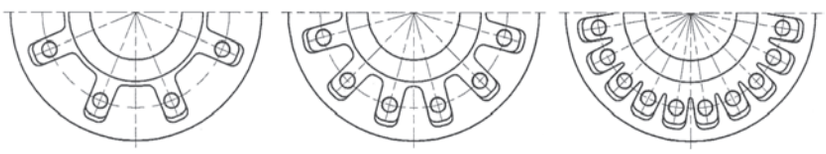

TYPE - B TYPE - C TYPE - D

Dimension >>>

UNIT : mm

MODEL \ DIM	BASE PART							EXTERNAL PART						INPUT SHAFT PART			HAND WHEEL	STEM COVER
	TYPE	FLANGE	ØD1	P.C.D ØD2	P.C.D N-H-DP	ØD3	H	H1	H2	H3	K	K1	L	L1	ØPD	KEY		
SB-V2H-1SDT	B	F-25	200	254	8-M16-24	300	3	99	229	273.5	69	373	260.5	34	26	8X7	400	PF3-1/2"
SB-V3H-1SDT		F-30	230	298	8-M20-30	350		118	263	310		407	280.5				500	PF4"
SB-V35H-1SDT		F-35	260	356	8-M30-45	415		143	316	373	93	511	369	34	32	10X8	630	PF5"
SB-V4H-1SDT								155	342	401		537	394					PF6"
SB-V5H-1SDT		F-40	300	406	8-M36-55	475		172	376	444	121	625	426				710	
SB-V55H-1SDT	C	F-48	370	483	12-M36-55	560	5	186	410	479	121	659	446	34	32	10X8	710	PF6"
SB-V6H-1SDT		F-48	370	483	12-M36-55	560		197	429	511	145	726.5	498	44	38	12X8	800	PF8"
SB-V7H-1SDT		F-48						217	475	562		772.5	526				900	
SB-V75H-1SDT	D	F-60	470	603	20-M36-55	700	5	229	505	597	186	885	666	58	50	16X10	1000	PF10"
SB-V8H-1SDT		F-60	470	603	20-M36-55	700		242	540	635		920	697	58	50	16X10	1000	
SB-V85H-1SDT		F-60						269	612	706		992	741					PF12"
* SB-V9H-1SDT		F-80	670	813	20-M42-63	900		281	636	739	238	1124	876	58	50	16X10	1000	
* SB-V10H-1SDT		F-80						305	701	816		1189	941					

Size and component specification in this catalogue are subject to change without prior notice for quality improvement.
* Mark has been changed and updated.

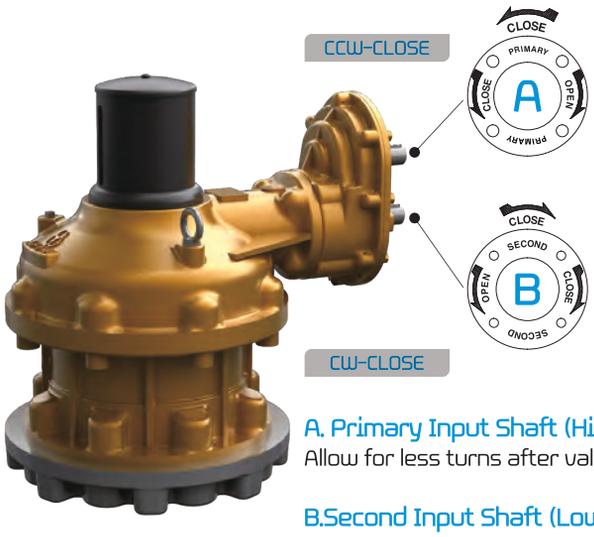

Disassembly flow chart of thrust bush for processing of stem thread

1. Remove base plate socket head cap screws and base plate.
2. Remove Gasket
3. Use eye-bolts from housing and thread into tapped holes on end of the drive bushing.
4. Lift drive bushing with lower roller bearing.
5. Remove roller bearing from drive bushing.
6. Thread bushing as required.
7. Add grease as necessary.
8. Re-assembly in reverse order.

A. Primary Input Shaft (High Speed Input Shaft)

Allow for less turns after valve has been unseating.

B.Second Input Shaft (Low Speed Input Shaft)

Provides maximum mechanical advantage for seating and unseating of valves.

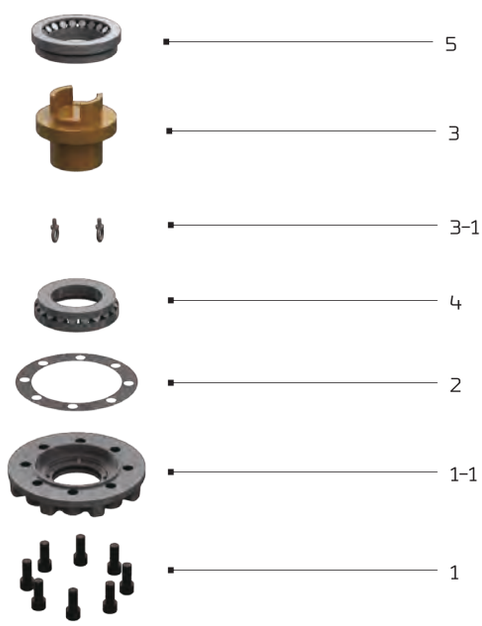

Feature >>>

- This series suitable for extreme high thrust loads for use with Gate & Glove type valves. Also sluice gates and any other type requiring linear motion for high load thrust and torque applications.
- Bottom entry type stem nut. High tensile aluminum bronze material providing corrosion and abrasion resistance.
- Castings are Ductile Iron, class 65-45-12 providing high strength and impact resistance.
- Heavy duty roller bearings supporting both radial & axial thrust loads.
- Gears are Machine cut, heat treated and ground for optimum operation, Units are completely O-Ring Sealed suitable for temporary submergence to meet Ip67 class.
- Many options, such as hand wheels, chain wheels, stem covers, position dial indicators are available.

Global Leader SAMBO GEAR ACTUATORS for Industrial Valves

The World's Highest Quality!

Selection Chart for Manual Operation >>>

SIZE / MODEL	GEAR RATIO		MAX. STEM ACCEPTANCE		BASE MOUNTING OPTION & STANDARD	MAX. THRUST CAPACITY		MAX. TORQUE CAPACITY		WEIGHT
	PRIMARY	SECOND	TW	KEY		KN	lbf	N–m	Ft . lbf	Kg
SB–V2H–1SDT	10.13 : 1	25.67 : 1	65	55 (16X10)	(F–20), F–25	1080	242800	2900	2139	71
SB–V3H–1SDT	12.66 : 1	32.08 : 1	80	70 (20X12)	F–25, F–30	1710	384400	4500	3319	102
SB–V35H–1SDT	16.5 : 1	49.5 : 1	95	85 (22X14)	F–25, F–30, F–35	2450	550800	7000	5163	174
SB–V4H–1SDT	18 : 1	54 : 1	110	95 (25X14)		2900	651900	9800	7228	216
SB–V5H–1SDT	22.94 : 1	80.31 : 1	130	115 (32X18)	F–30, F–35, F–40	3500	786800	15000	11063	280
SB–V55H–1SDT	24.5 : 1	85.75 : 1	140	120 (32X18)	F–35, F–40, F–48	4200	944197	19000	14014	407
SB–V6H–1SDT	28 : 1	112 : 1	150	130 (36X20)	F–35, F–40, F–48	4700	1056600	23000	16964	566
SB–V7H–1SDT	30.22 : 1	120.88 : 1	170	150 (40X22)	F–48	5200	1169000	37000	27290	636
SB–V75H–1SDT	40 : 1	200 : 1	190	170 (40X22)	F–48, F–60	6800	1528701	46000	33928	965
SB–V8H–1SDT	40 : 1	200 : 1	215	185 (45X25)	F–48, F–60	7650	1719800	58000	42778	1055
SB–V85H–1SDT	40 : 1	200 : 1	225	195 (45X25)	F–48, F–60	9100	2045760	74000	54579	1320
* SB–V9H–1SDT	40 : 1	200 : 1	240	215 (50X28)	F–60, F–80	9400	2113200	104000	76706	1932
* SB–V10H–1SDT	40 : 1	200 : 1	270	240 (56X32)	F–60, F–80	11500	2585300	142000	104734	2104

Size and component specification in this catalogue are subject to change without prior notice for quality improvement.
* Mark has been changed and updated.

SAMBO

STANDARD TYPE-E

High Load Thrust & Torque Vertical Input with Single Reduction Gear Attachment

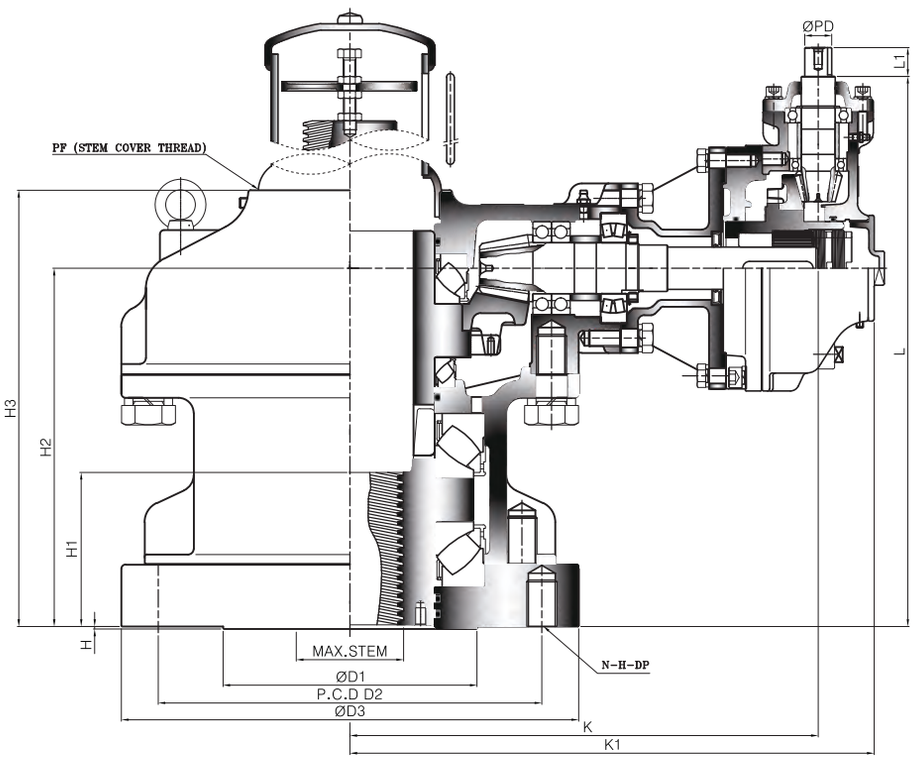

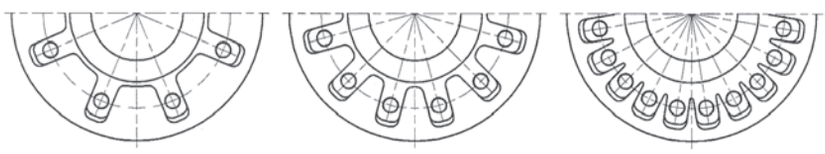

TYPE - B TYPE - C TYPE - D

Dimension >>>

UNIT : mm

MODEL \ DIM	BASE PART							EXTERNAL PART						INPUT SHAFT PART			HAND WHEEL	STEM COVER
	TYPE	FLANGE	ØD1	P.C.D ØD2	P.C.D N-H-DP	ØD3	H	H1	H2	H3	K	K1	L	L1	ØPD	KEY		
SB-V2H-2B	B	F-25	200	254	8-M16-24	300	3	99	229	273.5	299	340	350	34	26	8X7	300	PF3-1/2"
SB-V3H-2B		F-30	230	298	8-M20-30	350		118	263	310	326.5	368	394					PF4"
SB-V35H-2B		F-35	260	356	8-M30-45	415		143	316	373	415	474	470.5	34	32	10X8	400	PF5"
SB-V4H-2B								155	342	401	457	521	509				500	PF6"
SB-V5H-2B		F-40	300	406	8-M36-55	475		172	376	444	419	488.5	564				630	
SB-V55H-2B	C	F-48	370	483	12-M36-55	560	5	186	410	479	439	508.5	598	34	32	10X8	630	PF6"
SB-V6H-2B		F-48	370	483	12-M36-55	560		197	429	511	482	557.5	637				710	PF8"
SB-V7H-2B		F-48						217	475	562	510	585.5	683					
* SB-V75H-2B	D	F-60	470	603	20-M36-55	700	5	229	505	597	567	639	771	44	38	12X8	800	PF10"
SB-V8H-2B		F-60	470	603	20-M36-55	700		242	540	635	608	670	806					
SB-V85H-2B		F-60						269	612	706	654	730	903				900	PF12"
* SB-V9H-2B		F-80	670	813	20-M42-63	900		281	636	739	749	833	970					
* SB-V10H-2B		F-80						305	701	816	845	938	1076	58	50	16X10	1000	

Size and component specification in this catalogue are subject to change without prior notice for quality improvement.
* Mark has been changed and updated.

Disassembly flow chart of thrust bush for processing of stem thread

1. Remove base plate socket head cap screws and base plate.
2. Remove Gasket
3. Use eye-bolts from housing and thread into tapped holes on end of the drive bushing.
4. Lift drive bushing with lower roller bearing.
5. Remove roller bearing from drive bushing.
6. Thread bushing as required.
7. Add grease as necessary.
8. Re-assembly in reverse order.

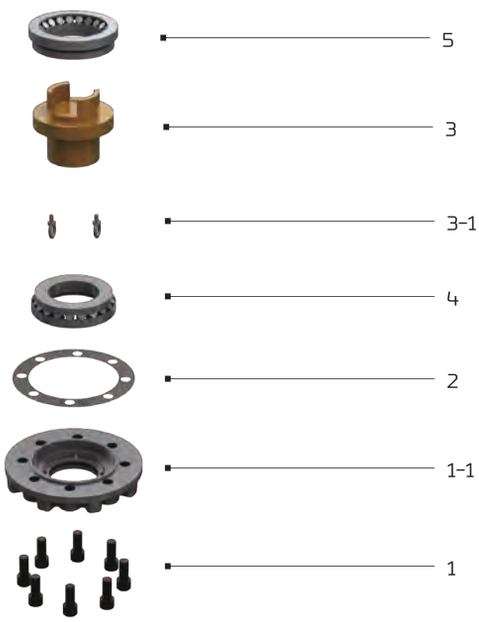

Feature >>>

- This series suitable for extreme high thrust loads for use with Gate & Glove type valves. Also sluice gates and any other type requiring linear motion for high load thrust and torque applications.
- Bottom entry type stem nut. High tensile aluminum bronze material providing corrosion and abrasion resistance.
- Castings are Ductile Iron, class 65-45-12 providing high strength and impact resistance.
- Heavy duty roller bearings supporting both radial & axial thrust loads.
- Gears are Machine cut, heat treated and ground for optimum operation, Units are completely O-Ring Sealed suitable for temporary submergence to meet Ip67 class.
- Many options, such as hand wheels, chain wheels, stem covers, position dial indicators are available.

Global Leader SAMBO GEAR ACTUATORS for Industrial Valves

The World's Highest Quality!

Selection Chart for Manual Operation >>>

SIZE / MODEL	GEAR RATIO	MAX. STEM ACCEPTANCE		BASE MOUNTING OPTION & STANDARD	MAX. THRUST CAPACITY		MAX. TORQUE CAPACITY		WEIGHT
		TW	KEY		KN	lbf	N–m	Ft . lbf	Kg
SB–V2H–2B	10 : 1	65	55 (16X10)	(F–20), F–25	1080	242800	2900	2139	71
SB–V3H–2B	15 : 1	80	70 (20X12)	F–25, F–30	1710	384400	4500	3319	105
SB–V35H–2B	17.87 : 1	95	85 (22X14)	F–25, F–30, F–35	2450	550800	7000	5163	173
SB–V4H–2B	21 : 1	110	95 (25X14)		2900	651900	9800	7228	222
SB–V5H–2B	26.22 : 1	130	115 (32X18)	F–30, F–35, F–40	3500	786800	15000	11063	297
SB–V55H–2B	28 : 1	140	120 (32X18)	F–35, F–40, F–48	4200	944197	19000	14014	424
SB–V6H–2B	35 : 1	150	130 (36X20)	F–35, F–40, F–48	4700	1056600	23000	16964	565
SB–V7H–2B	37.77 : 1	170	150 (40X22)	F–48	5200	1169000	37000	27290	635
* SB–V75H–2B	44 : 1	190	170 (40X22)	F–48, F–60	6800	1528701	46000	33928	943
SB–V8H–2B	44 : 1	215	185 (45X25)	F–48, F–60	7650	1719800	58000	42778	1032
SB–V85H–2B	48 : 1	225	195 (45X25)	F–48, F–60	9100	2045760	74000	54579	1319
* SB–V9H–2B	52.44 : 1	240	215 (50X28)	F–60, F–80	9400	2113200	104000	76706	1951
* SB–V10H–2B	56 : 1	270	240 (56X32)	F–60, F–80	11500	2585300	142000	104734	2207

Size and component specification in this catalogue are subject to change without prior notice for quality improvement.
* Mark has been changed and updated.

STANDARD TYPE-F Multiple Input Shaft
High Load Thrust & Torque Horizontal Input

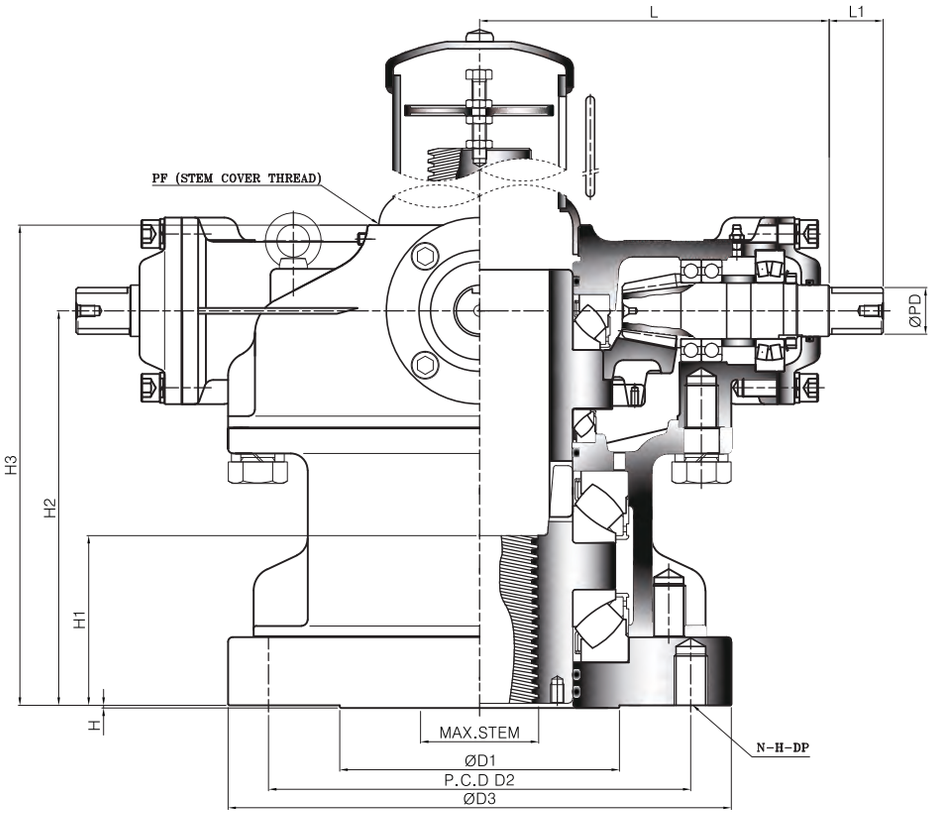

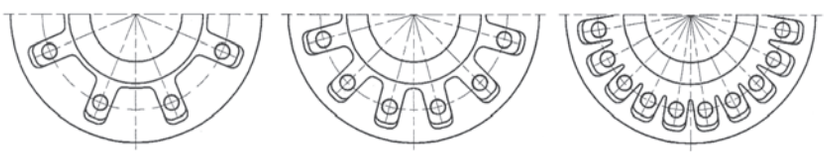

TYPE - B TYPE - C TYPE - D

Dimension >>>

UNIT : mm

DIM / MODEL	BASE PART							EXTERNAL PART				INPUT SHAFT PART			HAND WHEEL	STEM COVER
	TYPE	FLANGE	ØD1	P.C.D ØD2	P.C.D N-H-DP	ØD3	H	H1	H2	H3	L	L1	ØPD	KEY		
SB-V2HW	B	F-25	200	254	8-M16-24	300	3	99	229	273.5	188	34	32	10X8	630	PF3-1/2"
SB-V3HW		F-30	230	298	8-M20-30	350		118	263	310.5	208				710	PF4"
SB-V35HW		F-35	260	356	8-M30-45	415		143	316	373	266	44	38	12X8	800	PF5"
SB-V4HW								155	342	401	291				900	PF6"
SB-V5HW		F-40	300	406	8-M36-55	475		172	376	444	313					
SB-V55HW	C	F-48	370	483	12-M36-55	560	5	186	410	479	333	44	38	12X8	900	PF6"
SB-V6HW		F-48	370	483	12-M36-55	560		197	429	511	381	58	50	16X10	1000	PF8"
SB-V7HW		F-48						217	475	562	409					
SB-V75HW	D	F-60	470	603	20-M36-55	700	5	229	505	597	441	58	50	16X10	1000	PF10"
SB-V8HW		F-60	470	603	20-M36-55	700		242	540	635	472					
SB-V85HW		F-60						269	612	706	525					PF12"
* SB-V9HW		F-80	670	813	20-M42-63	900		281	636	739	591					
* SB-V10HW		F-80						305	701	816	664					

Size and component specification in this catalogue are subject to change without prior notice for quality improvement.
* Mark has been changed and updated.

Disassembly flow chart of thrust bush for processing of stem thread

1. Remove base plate socket head cap screws and base plate.
2. Remove Gasket
3. Use eye-bolts from housing and thread into tapped holes on end of the drive bushing.
4. Lift drive bushing with lower roller bearing.
5. Remove roller bearing from drive bushing.
6. Thread bushing as required.
7. Add grease as necessary.
8. Re-assembly in reverse order.

Feature >>>

- This series suitable for extreme high thrust loads for use with Gate & Glove type valves. Also sluice gates and any other type requiring linear motion for high load thrust and torque applications.
- Bottom entry type stem nut. High tensile aluminum bronze material providing corrosion and abrasion resistance.
- Castings are Ductile Iron, class 65-45-12 providing high strength and impact resistance.
- Heavy duty roller bearings supporting both radial & axial thrust loads.
- Gears are Machine cut, heat treated and ground for optimum operation, Units are completely O-Ring Sealed suitable for temporary submergence to meet Ip67 class.
- Many options, such as hand wheels, chain wheels, stem covers, position dial indicators are available.

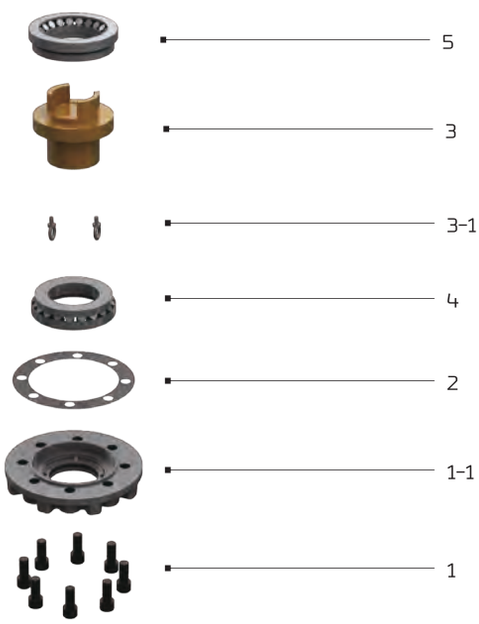

Global Leader SAMBO GEAR ACTUATORS for Industrial Valves

The World's Highest Quality!

Selection Chart for Manual Operation >>>

SIZE / MODEL	GEAR RATIO	MAX. STEM ACCEPTANCE		BASE MOUNTING OPTION & STANDARD	MAX. THRUST CAPACITY		MAX. TORQUE CAPACITY		WEIGHT
		TW	KEY		KN	lbf	N–m	Ft . lbf	Kg
SB–V2HW	4 : 1	65	55 (16X10)	(F–20), F–25	1080	242800	2900	2139	65
SB–V3HW	5 : 1	80	70 (20X12)	F–25, F–30	1710	384400	4500	3319	96
SB–V35HW	5.5 : 1	95	85 (22X14)	F–25, F–30, F–35	2450	550800	7000	5163	162
SB–V4HW	6 : 1	110	95 (25X14)		2900	651900	9800	7228	207
SB–V5HW	6.56 : 1	130	115 (32X18)	F–30, F–35, F–40	3500	786800	15000	11063	273
SB–V55HW	7 : 1	140	120 (32X18)	F–35, F–40, F–48	4200	944197	19000	14014	399
SB–V6HW	7 : 1	150	130 (36X20)	F–35, F–40, F–48	4700	1056600	23000	16964	535
SB–V7HW	7.56 : 1	170	150 (40X22)	F–48	5200	1169000	37000	27290	607
SB–V75HW	8 : 1	190	170 (40X22)	F–48, F–60	6800	1528701	46000	33928	878
SB–V8HW	8 : 1	215	185 (45X25)	F–48, F–60	7650	1719800	58000	42778	970
SB–V85HW	8 : 1	225	195 (45X25)	F–48, F–60	9100	2045760	74000	54579	1238
* SB–V9HW	8 : 1	240	215 (50X28)	F–60, F–80	9400	2113200	104000	76706	1819
* SB–V10HW	8 : 1	270	240 (56X32)	F–60, F–80	11500	2585300	142000	104734	2002

Size and component specification in this catalogue are subject to change without prior notice for quality improvement.
* Mark has been changed and updated.

STANDARD TYPE-F Multiple Input Shaft
High Load Thrust & Torque Horizontal Input with Single Reduction Gear Attachment

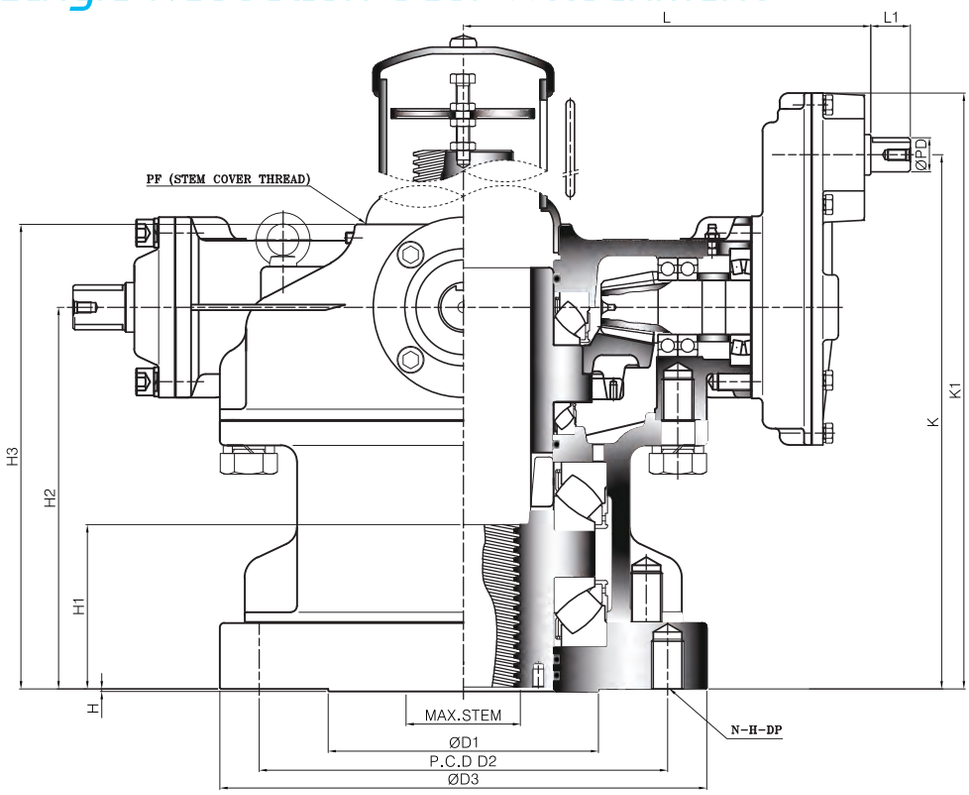

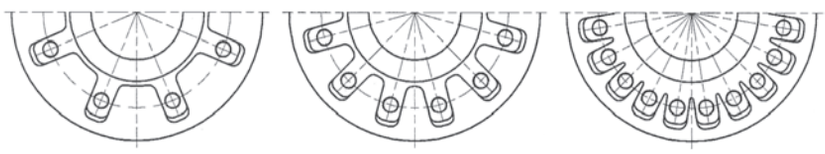

TYPE - B TYPE - C TYPE - D

Dimension >>>

UNIT : mm

DIM / MODEL	BASE PART							EXTERNAL PART						INPUT SHAFT PART			HAND WHEEL	STEM COVER
	TYPE	FLANGE	ØD1	P.C.D ØD2	P.C.D N-H-DP	ØD3	H	H1	H2	H3	K	K1	L	L1	ØPD	KEY		
SB-V2HW-1S	B	F-25	200	254	8-M16-24	300	3	99	229	273.5	322	370	236.5	34	26	8X7	400	PF3-1/2"
SB-V3HW-1S		F-30	230	298	8-M20-30	350		118	263	310	356	404	256.5				500	PF4"
SB-V35HW-1S		F-35	260	356	8-M30-45	415		143	316	373	437	494	333	34	32	10X8	630	PF5"
SB-V4HW-1S								155	342	401	463	520	358					PF6"
SB-V5HW-1S		F-40	300	406	8-M36-55	475		172	376	444	521	584	387				710	
SB-V55HW-1S	C	F-48	370	483	12-M36-55	560	5	186	410	479	555	617	407	34	32	10X8	710	PF6"
SB-V6HW-1S		F-48	370	483	12-M36-55	560		197	429	511	598	666	472	44	38	12X8	800	PF8"
SB-V7HW-1S		F-48						217	475	562	644	713	497				900	
SB-V75HW-1S	D	F-60	470	603	20-M36-55	700	5	229	505	597	735	821	620	58	50	16X10	1000	PF10"
SB-V8HW-1S								242	540	635	770	856	651					
SB-V85HW-1S		F-60						269	612	706	842	928	695					PF12"
* SB-V9HW-1S		F-80	670	813	20-M42-63	900		281	636	739	920	1036	821					
* SB-V10HW-1S		F-80						305	701	816	985	1101	886					

Size and component specification in this catalogue are subject to change without prior notice for quality improvement.
* Mark has been changed and updated.

Disassembly flow chart of thrust bush for processing of stem thread

1. Remove base plate socket head cap screws and base plate.
2. Remove Gasket
3. Use eye-bolts from housing and thread into tapped holes on end of the drive bushing.
4. Lift drive bushing with lower roller bearing.
5. Remove roller bearing from drive bushing.
6. Thread bushing as required.
7. Add grease as necessary.
8. Re-assembly in reverse order.

Feature >>>

- This series suitable for extreme high thrust loads for use with Gate & Glove type valves. Also sluice gates and any other type requiring linear motion for high load thrust and torque applications.
- Bottom entry type stem nut. High tensile aluminum bronze material providing corrosion and abrasion resistance.
- Castings are Ductile Iron, class 65-45-12 providing high strength and impact resistance.
- Heavy duty roller bearings supporting both radial & axial thrust loads.
- Gears are Machine cut, heat treated and ground for optimum operation, Units are completely O-Ring Sealed suitable for temporary submergence to meet Ip67 class.
- Many options, such as hand wheels, chain wheels, stem covers, position dial indicators are available.

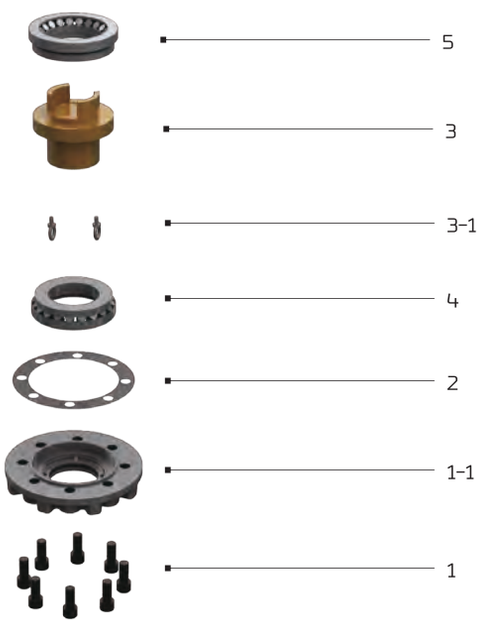

Global Leader SAMBO GEAR ACTUATORS for Industrial Valves

The World's Highest Quality!

Selection Chart for Manual Operation >>>

SIZE / MODEL	GEAR RATIO	MAX. STEM ACCEPTANCE		BASE MOUNTING OPTION & STANDARD	MAX. THRUST CAPACITY		MAX. TORQUE CAPACITY		WEIGHT
		TW	KEY		KN	lbf	N–m	Ft . lbf	Kg
SB–V2HW–1S	10.13 : 1	65	55 (16X10)	(F–20), F–25	1080	242800	2900	2139	73
SB–V3HW–1S	12.66 : 1	80	70 (20X12)	F–25, F–30	1710	384400	4500	3319	104
SB–V35HW–1S	16.5 : 1	95	85 (22X14)	F–25, F–30, F–35	2450	550800	7000	5163	174
SB–V4HW–1S	18 : 1	110	95 (25X14)		2900	651900	9800	7228	219
SB–V5HW–1S	22.94 : 1	130	115 (32X18)	F–30, F–35, F–40	3500	786800	15000	11063	285
SB–V55HW–1S	24.5 : 1	140	120 (32X18)	F–35, F–40, F–48	4200	944197	19000	14014	412
SB–V6HW–1S	28 : 1	150	130 (36X20)	F–35, F–40, F–48	4700	1056600	23000	16964	563
SB–V7HW–1S	30.22 : 1	170	150 (40X22)	F–48	5200	1169000	37000	27290	635
SB–V75HW–1S	40 : 1	190	170 (40X22)	F–48, F–60	6800	1528701	46000	33928	950
SB–V8HW–1S	40 : 1	215	185 (45X25)	F–48, F–60	7650	1719800	58000	42778	1042
SB–V85HW–1S	40 : 1	225	195 (45X25)	F–48, F–60	9100	2045760	74000	54579	1310
* SB–V9HW–1S	40 : 1	240	215 (50X28)	F–60, F–80	9400	2113200	104000	76706	1916
* SB–V10HW–1S	40 : 1	270	240 (56X32)	F–60, F–80	11500	2585300	142000	104734	2099

Size and component specification in this catalogue are subject to change without prior notice for quality improvement.
* Mark has been changed and updated.

STANDARD TYPE-F Multiple Input Shaft

High Load Thrust & Torque Horizontal Input with Double Reduction Gear Attachment

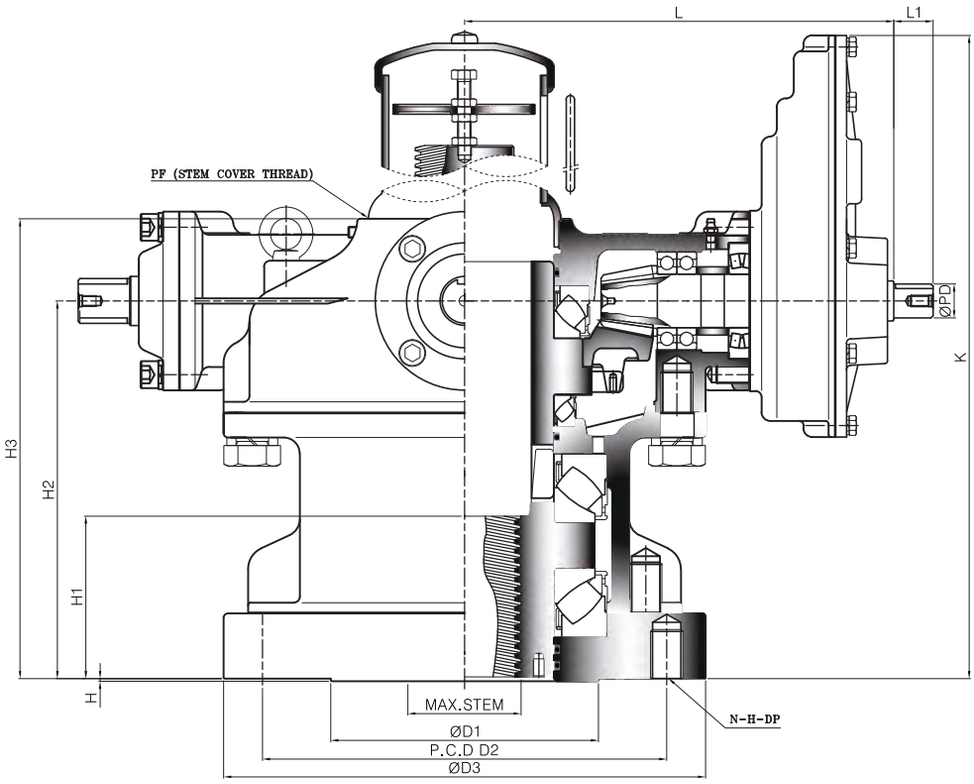

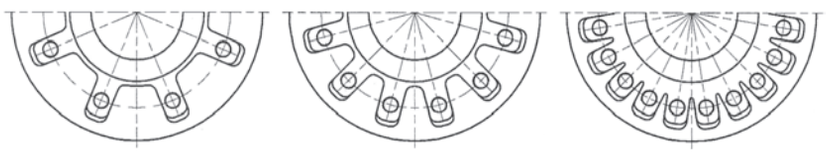

TYPE - B TYPE - C TYPE - D

Dimension >>>

UNIT : mm

DIM / MODEL	BASE PART							EXTERNAL PART					INPUT SHAFT PART			HAND WHEEL	STEM COVER
	TYPE	FLANGE	ØD1	P.C.D ØD2	P.C.D N-H-DP	ØD3	H	H1	H2	H3	K	L	L1	ØPD	KEY		
SB-V2HW-1SD	B	F-25	200	254	8-M16-24	300	3	99	229	273.5	373	260.5	34	26	8X7	400	PF3-1/2"
SB-V3HW-1SD		F-30	230	298	8-M20-30	350		118	263	310	407	280.5				500	PF4"
SB-V35HW-1SD		F-35	260	356	8-M30-45	415		143	316	373	511	369	34	32	10X8	630	PF5"
SB-V4HW-1SD								155	342	401	537	394					PF6"
SB-V5HW-1SD		F-40	300	406	8-M36-55	475		172	376	444	625	426				710	
SB-V55HW-1SD	C	F-48	370	483	12-M36-55	560	5	186	410	479	659	446	34	32	10X8	710	PF6"
SB-V6HW-1SD		F-48	370	483	12-M36-55	560		197	429	511	726.5	498	44	38	12X8	800	PF8"
SB-V7HW-1SD		F-48						217	475	562	772.5	526				900	
SB-V75HW-1SD	D	F-60	470	603	20-M36-55	700	5	229	505	597	885	666	58	50	16X10	1000	PF10"
SB-V8HW-1SD		F-60	470	603	20-M36-55	700		242	540	635	920	697					
SB-V85HW-1SD		F-60						269	612	706	992	741					PF12"
* SB-V9HW-1SD		F-80	670	813	20-M42-63	900		281	636	739	1124	876					
* SB-V10HW-1SD		F-80						305	701	816	1189	941					

Size and component specification in this catalogue are subject to change without prior notice for quality improvement.
* Mark has been changed and updated.

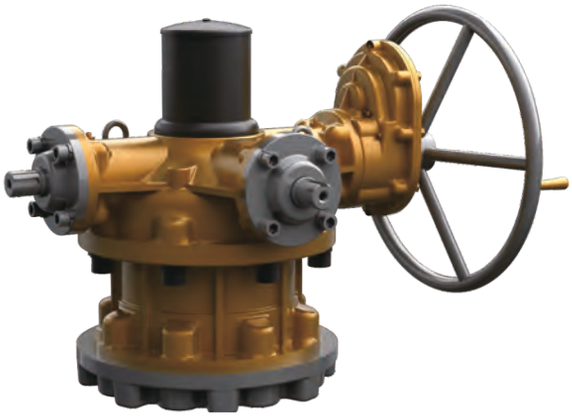

Disassembly flow chart of thrust bush for processing of stem thread

1. Remove base plate socket head cap screws and base plate.
2. Remove Gasket
3. Use eye-bolts from housing and thread into tapped holes on end of the drive bushing.
4. Lift drive bushing with lower roller bearing.
5. Remove roller bearing from drive bushing.
6. Thread bushing as required.
7. Add grease as necessary.
8. Re-assembly in reverse order.

Feature >>>

- This series suitable for extreme high thrust loads for use with Gate & Glove type valves. Also sluice gates and any other type requiring linear motion for high load thrust and torque applications.
- Bottom entry type stem nut. High tensile aluminum bronze material providing corrosion and abrasion resistance.
- Castings are Ductile Iron, class 65-45-12 providing high strength and impact resistance.
- Heavy duty roller bearings supporting both radial & axial thrust loads.
- Gears are Machine cut, heat treated and ground for optimum operation, Units are completely O-Ring Sealed suitable for temporary submergence to meet Ip67 class.
- Many options, such as hand wheels, chain wheels, stem covers, position dial indicators are available.

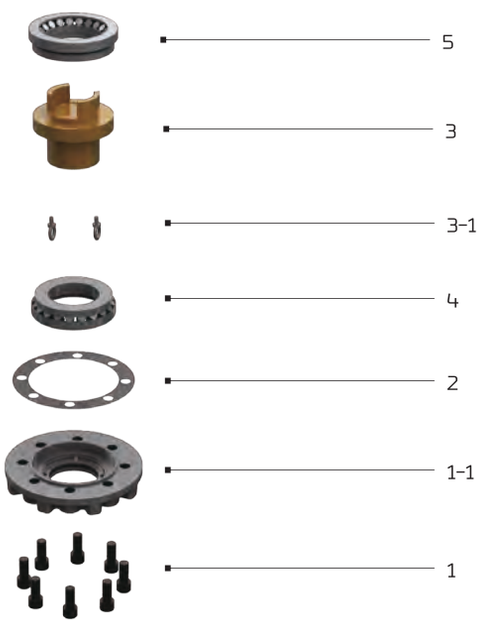

Global Leader SAMBO GEAR ACTUATORS for Industrial Valves

The World's Highest Quality!

Selection Chart for Manual Operation >>>

SIZE / MODEL	MAX. GEAR RATIO (Changeable)	MAX. STEM ACCEPTANCE		BASE MOUNTING OPTION & STANDARD	MAX. THRUST CAPACITY		MAX. TORQUE CAPACITY		WEIGHT
		TW	KEY		KN	lbf	N–m	Ft . lbf	Kg
SB–V2HW–1SD	25.67 : 1	65	55 (16X10)	(F–20), F–25	1080	242800	2900	2139	74
SB–V3HW–1SD	32.08 : 1	80	70 (20X12)	F–25, F–30	1710	384400	4500	3319	105
SB–V35HW–1SD	49.5 : 1	95	85 (22X14)	F–25, F–30, F–35	2450	550800	7000	5163	178
SB–V4HW–1SD	54 : 1	110	95 (25X14)		2900	651900	9800	7228	223
SB–V5HW–1SD	80.31 : 1	130	115 (32X18)	F–30, F–35, F–40	3500	786800	15000	11063	289
SB–V55HW–1SD	85.75 : 1	140	120 (32X18)	F–35, F–40, F–48	4200	944197	19000	14014	416
SB–V6HW–1SD	112 : 1	150	130 (36X20)	F–35, F–40, F–48	4700	1056600	23000	16964	576
SB–V7HW–1SD	120.88 : 1	170	150 (40X22)	F–48	5200	1169000	37000	27290	648
SB–V75HW–1SD	200 : 1	190	170 (40X22)	F–48, F–60	6800	1528701	46000	33928	978
SB–V8HW–1SD	200 : 1	215	185 (45X25)	F–48, F–60	7650	1719800	58000	42778	1070
SB–V85HW–1SD	200 : 1	225	195 (45X25)	F–48, F–60	9100	2045760	74000	54579	1338
* SB–V9HW–1SD	200 : 1	240	215 (50X28)	F–60, F–80	9400	2113200	104000	76706	1954
* SB–V10HW–1SD	200 : 1	270	240 (56X32)	F–60, F–80	11500	2585300	142000	104734	2137

Size and component specification in this catalogue are subject to change without prior notice for quality improvement.
* Mark has been changed and updated.

STANDARD TYPE-F Multiple Input Shaft
High Load Thrust & Torque Vertical Input with Single Reduction Gear Attachment

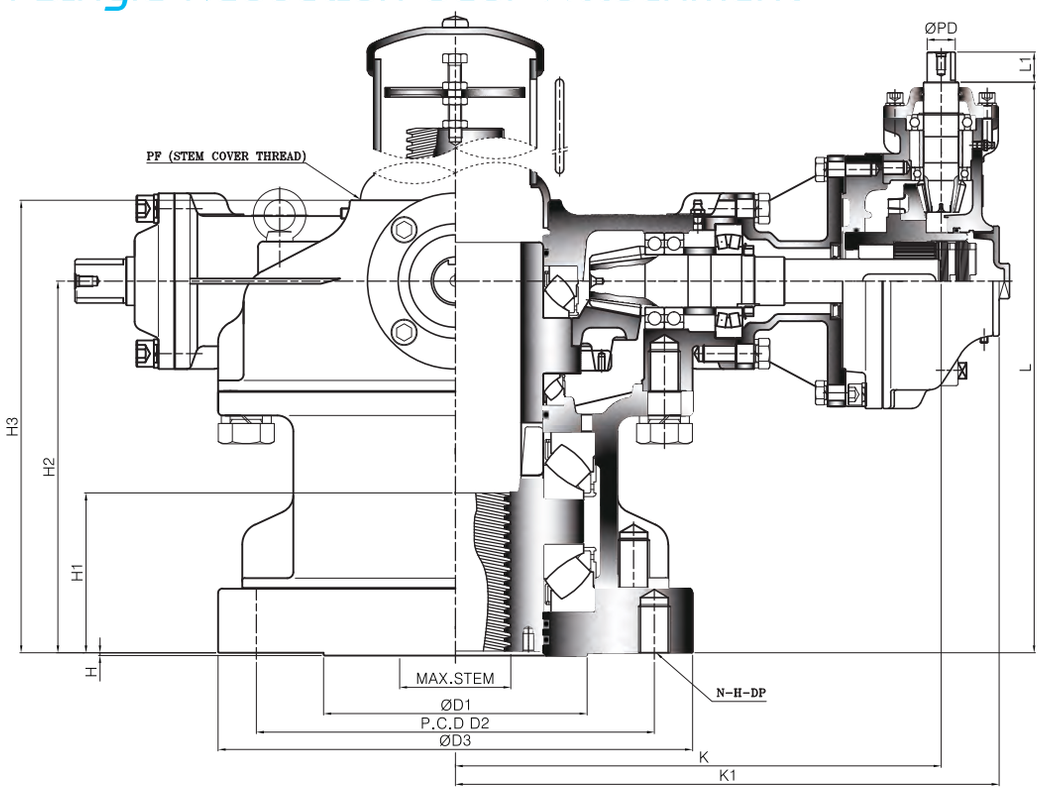

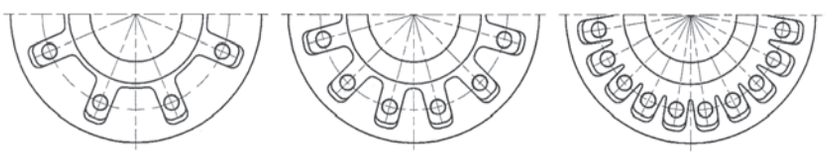

TYPE - B TYPE - C TYPE - D

Dimension >>>

UNIT : mm

DIM / MODEL	BASE PART							EXTERNAL PART						INPUT SHAFT PART			HAND WHEEL	STEM COVER
	TYPE	FLANGE	ØD1	P.C.D ØD2	P.C.D N-H-DP	ØD3	H	H1	H2	H3	K	K1	L	L1	ØPD	KEY		
SB-V2HW-2B	B	F-25	200	254	8-M16-24	300	3	99	229	273.5	299	340	350	34	26	8X7	300	PF3-1/2"
SB-V3HW-2B		F-30	230	298	8-M20-30	350		118	263	310	326.5	368	394					PF4"
SB-V35HW-2B		F-35	260	356	8-M30-45	415		143	316	373	415	474	470.5	34	32	10X8	400	PF5"
SB-V4HW-2B								155	342	401	457	521	509				500	PF6"
SB-V5HW-2B		F-40	300	406	8-M36-55	475		172	376	444	419	488.5	564				630	
SB-V55HW-2B	C	F-48	370	483	12-M36-55	560	5	186	410	479	439	508.5	598	34	32	10X8	630	PF6"
SB-V6HW-2B		F-48	370	483	12-M36-55	560		197	429	511	482	557.5	637				710	PF8"
SB-V7HW-2B		F-48						217	475	562	510	585.5	683					
* SB-V75HW-2B	D	F-60	470	603	20-M36-55	700	5	229	505	597	567	639	771	44	38	12X8	800	PF10"
SB-V8HW-2B		F-60	470	603	20-M36-55	700		242	540	635	608	670	806					
SB-V85HW-2B		F-60						269	612	706	654	730	903				900	PF12"
* SB-V9HW-2B		F-80	670	813	20-M42-63	900		281	636	739	749	833	970					
* SB-V10HW-2B		F-80						305	701	816	845	938	1076	58	50	16X10	1000	

Size and component specification in this catalogue are subject to change without prior notice for quality improvement.
* Mark has been changed and updated.

Disassembly flow chart of thrust bush for processing of stem thread

1. Remove base plate socket head cap screws and base plate.
2. Remove Gasket
3. Use eye-bolts from housing and thread into tapped holes on end of the drive bushing.
4. Lift drive bushing with lower roller bearing.
5. Remove roller bearing from drive bushing.
6. Thread bushing as required.
7. Add grease as necessary.
8. Re-assembly in reverse order.

Feature >>>

- This series suitable for extreme high thrust loads for use with Gate & Glove type valves. Also sluice gates and any other type requiring linear motion for high load thrust and torque applications.
- Bottom entry type stem nut. High tensile aluminum bronze material providing corrosion and abrasion resistance.
- Castings are Ductile Iron, class 65-45-12 providing high strength and impact resistance.
- Heavy duty roller bearings supporting both radial & axial thrust loads.
- Gears are Machine cut, heat treated and ground for optimum operation, Units are completely O-Ring Sealed suitable for temporary submergence to meet Ip67 class.
- Many options, such as hand wheels, chain wheels, stem covers, position dial indicators are available.

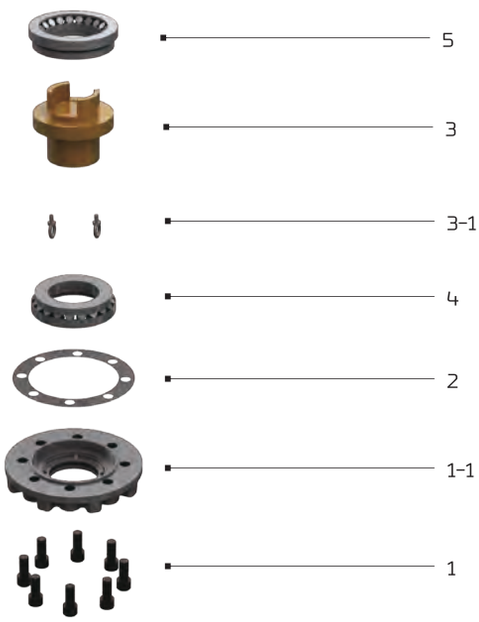

Global Leader SAMBO GEAR ACTUATORS for Industrial Valves

The World's Highest Quality!

Selection Chart for Manual Operation >>>

SIZE / MODEL	GEAR RATIO	MAX. STEM ACCEPTANCE		BASE MOUNTING OPTION & STANDARD	MAX. THRUST CAPACITY		MAX. TORQUE CAPACITY		WEIGHT
		TW	KEY		KN	lbf	N–m	Ft . lbf	Kg
SB–V2HW–2B	10 : 1	65	55 (16X10)	(F–20), F–25	1080	242800	2900	2139	74
SB–V3HW–2B	15 : 1	80	70 (20X12)	F–25, F–30	1710	384400	4500	3319	108
SB–V35HW–2B	17.87 : 1	95	85 (22X14)	F–25, F–30, F–35	2450	550800	7000	5163	177
SB–V4HW–2B	21 : 1	110	95 (25X14)		2900	651900	9800	7228	229
SB–V5HW–2B	26.22 : 1	130	115 (32X18)	F–30, F–35, F–40	3500	786800	15000	11063	321
SB–V55HW–2B	35 : 1	140	120 (32X18)	F–35, F–40, F–48	4200	944197	19000	14014	433
SB–V6HW–2B	35 : 1	150	130 (36X20)	F–35, F–40, F–48	4700	1056600	23000	16964	575
SB–V7HW–2B	37.77 : 1	170	150 (40X22)	F–48	5200	1169000	37000	27290	647
* SB–V75HW–2B	44 : 1	190	170 (40X22)	F–48, F–60	6800	1528701	46000	33928	956
SB–V8HW–2B	44 : 1	215	185 (45X25)	F–48, F–60	7650	1719800	58000	42778	1047
SB–V85HW–2B	48 : 1	225	195 (45X25)	F–48, F–60	9100	2045760	74000	54579	1337
* SB–V9HW–2B	52.44 : 1	240	215 (50X28)	F–60, F–80	9400	2113200	104000	76706	1973
* SB–V10HW–2B	56 : 1	270	240 (56X32)	F–60, F–80	11500	2585300	142000	104734	2240

Size and component specification in this catalogue are subject to change without prior notice for quality improvement.
* Mark has been changed and updated.

Spur Gear Actuators

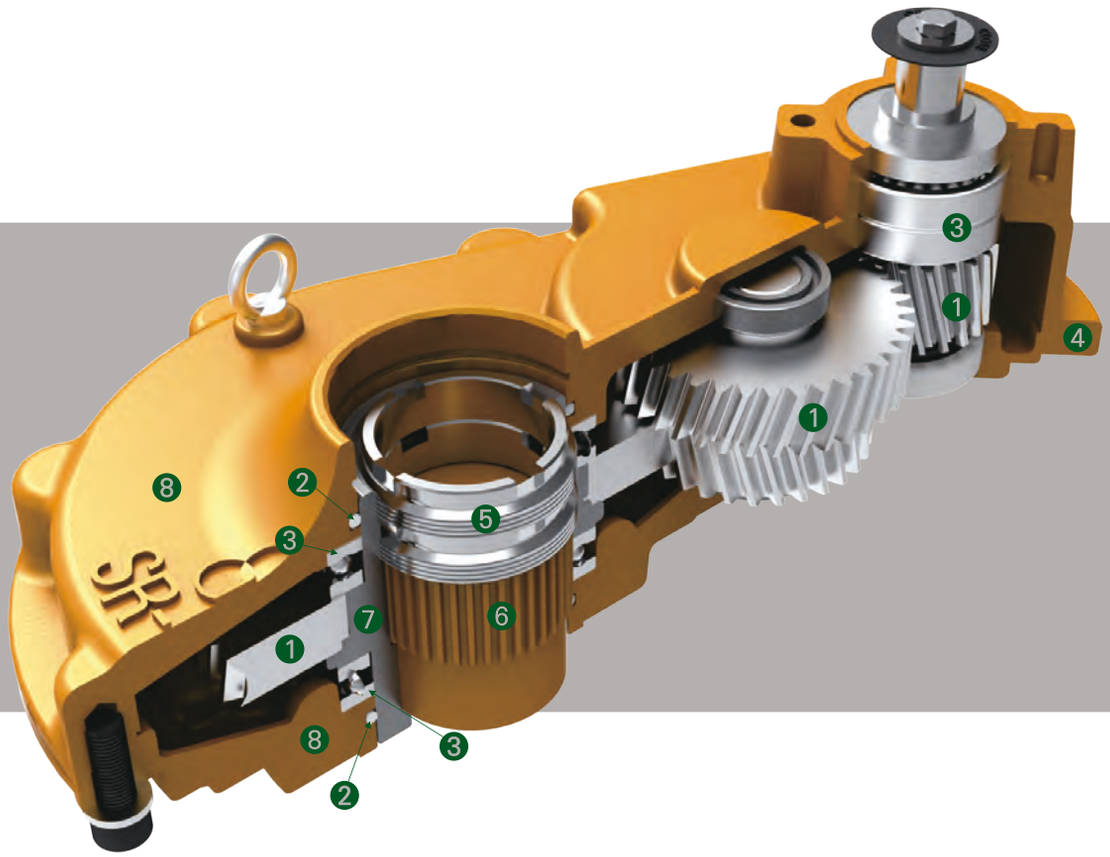

① Helical gear, Idle gear, Helical Pinion

All the gears are 1045 heat treated steel.
All the gears are precision cut.

② O-ring

Units are completely O-ring, suitable for temporary submergencu to meet IP67 Class.

③ Thrust ball & Deep groove ball Bearing

They have excellent load bearing capacity.

④ Gaskets

The base & housing is sealed by a Non-asbestor Gasket to prevent any leakage and is waterproof.

⑤ Dual Locking Nuts

This design incorporates dual locking nuts which provide a jam effect for positive locking.
No set screw or pinning is required.

Size and component specitication in this catalogue are subject to change without prior notice for quality improvement.
* Mark has been changed and updated.

Global Leader
SAMBO
SPIRAL BEVEL GEAR ACTUATORS

The World's Highest Quality!

Grease ZENITH EPSB 2 >>>

Each unit has a Alumite Grease type fitting and a grease plug to adding lubficant.

This series of Sper Gears range up to 32,000N.m(23,602ft-lbf)
Torque and Thrust capacities up to 4,100kN(921,700lbf)

Stem capacities are up to 160mm(6.3inch)
A high Load design, type SB-SRH is also available ranging up to 58,000N.m(42,778ft-lbf).
Thrust capacities up to 5,200kN(1,169,000lbf) stem capacities are up to 160mm(6.3inch).

⑥ Stem Nut

A unique top Entry Replaceable stem Nut.
After long years of service can be easily replaced without removing Gear from valve.
Material is high tensile brass providing both corrosion and abrasion resistance.

⑦ Drive Sleeve

Also Ductile Iron, Class 65-45-12. supports both axial and radial loads.

⑧ Housing and Base

All external casting are Ductile Iron. Class 65-45-12, Tensile Strength of 65,000psi.
This provides high strength and excellent impact resistance.

Size and component specification in this catalogue are subject to change without prior notice for quality improvement.
* Mark has been changed and updated.

Spur Gear Actuator Assembly

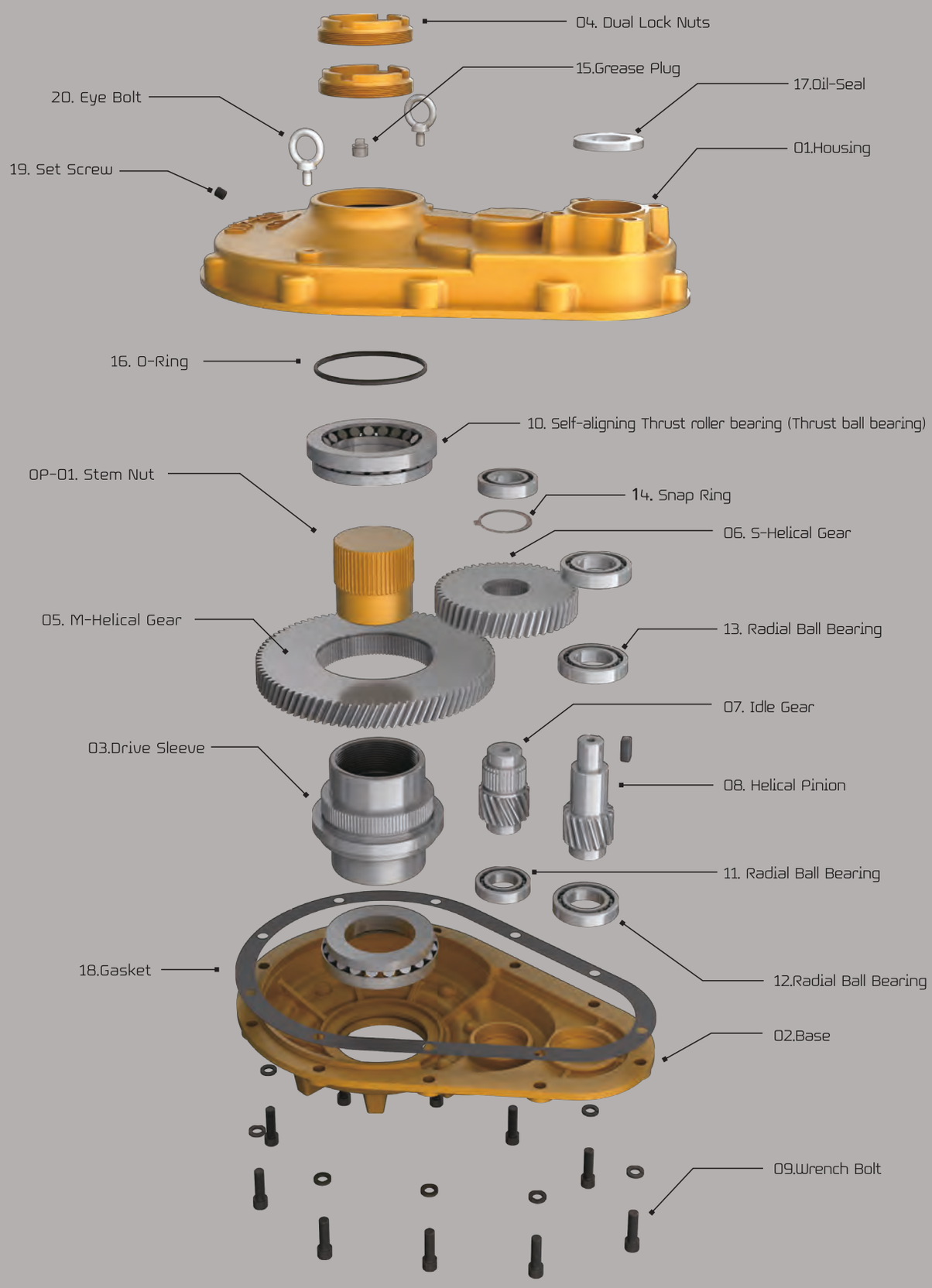

Size and component specification in this catalogue are subject to change without prior notice for quality improvement.
* Mark has been changed and updated.

Part List & Material >>>

	NO	DESCRIPTION	MATERIAL			REMARK
			NAME	JIS	ASTM	
STANDARD	1	Housing	Ductile Iron	FCD-450	A536-65-45-12	
	2	Base	Ductile Iron	FCD-450	A536-65-45-12	
	3	Drive Sleeve	Ductile Iron	FCD-450	A536-65-45-12	
	4	Dual Lock Nuts	Carbon Steel	S45C	A576-1045	
	5	M-Helical Gear	Carbon Steel	S45C	A576-1045	
	6	S-Helical Gear	Carbon Steel	S45C	A576-1045	
	7	Idle Gear	Carbon Steel	S45C	A576-1045	
	8	Helical Pinion	Carbon Steel	S45C	A576-1045	
	9	Wrench Bolt (S/W)	Alloy Steel	SCM435	A322-4135	
	10	Thrust Bearing	Special Steel	SUJ2	A295-52100	
	11	Radial Ball Bearing	Special Steel	SUJ2	A295-52100	
	12	Radial Ball Bearing	Special Steel	SUJ2	A295-52100	
	13	Radial Ball Bearing	Special Steel	SUJ2	A295-52100	
	14	Snap Ring	Steel			
	15	Grease Plug	Steel + Galvanizing			
	16	O-Ring	Silicon			
	17	Oil-Seal	Buna N	NBR		
	18	Gasket	Non Asbestos			VALQUA 6601
	19	Set Screw	Stainless Steel			
	20	Eye Bolt	Steel + Galvanizing			
OPTION	OP-01.	Stem Nut	Bronze	HBsC4	B505-C86300	NOTE. 3
	OP-02.	Hand Wheel	Steel Pipe	SGP	A53	HANDLE PART NOTE. 5
	OP-03.	Key	Carbon Steel	S45C	A576-1045	
	OP-04.	Name Plate	Stainless Steel			
	OP-05.	Washer	Stainless Steel			
	OP-06.	HEX. Bolt (S/W)	Stainless Steel			
	OP-07.	Stem Cover	Steel Pipe	SGP	A53	STEM COVER NOTE.6
	OP-08.	Indicate Bolt	Steel + Galvanizing			
	OP-09.	HEX. Nut	Steel + Galvanizing			
	OP-10.	Indicator	Plastic			

Material Detail : Option and Material Changes >>>

1. All castings are Ductile Iron, FCD-450 (ASTM Class 65-45-12)
2. In case of option for special request, it can be worked Nickel coating, high tensile stainless.
3. Also, the material can be changed as ALBC3(Aluminium Bronze), steel(A576-1045), A439 Gr D2C (Austenitic ductile iron casting), etc.
4. O-Ring Seal & Lubricant : Standard is Silicon & Buna "N", temperature range -20°C to +120°C (-4°F to +248°F).
   Standard lubricant is Zenith EPSB 2, temperature Range -20°C to +200°C (-4°F to +392°F).
   Other option are : High Temperature Viton O-Ring Grade V75, Temperature Range -30°C to +200°C (-22°F to +392°F)
   Lubricant - Zenith SYN WS2 Temperature Range -30°C~400°C (-13°F~752°F)
   Low Temperature Silicone O-Ring, Temperature Range -60°C to +150°C (-76°F to +302°F)
   Lubricant - Zenith SBLT600, Temperature Range -60°C~120°C (-76°F~248°F)
5. SAMBO offers a wide variety of Handwheels, Chainwheels, Input Shaft, Locking Devices and etc.
6. SAMBO offers a wide variety of stem cover, stainless steel, Polycarbonate.

Paint : Unless specified, units are supplied with vp134 Red epoxy primer. SAMBO can provide finish coating upon request.

Size and component specification in this catalogue are subject to change without prior notice for quality improvement.
* Mark has been changed and updated.

SAMBO

INDEX

Spur Gear

Size and component specification in this catalogue are subject to change without prior notice for quality improvement.
* Mark has been changed and updated.

PRODUCTS

Global Leader
SAMBO
GEAR ACTUATORS for Industrial Valves

The World's Highest Quality!

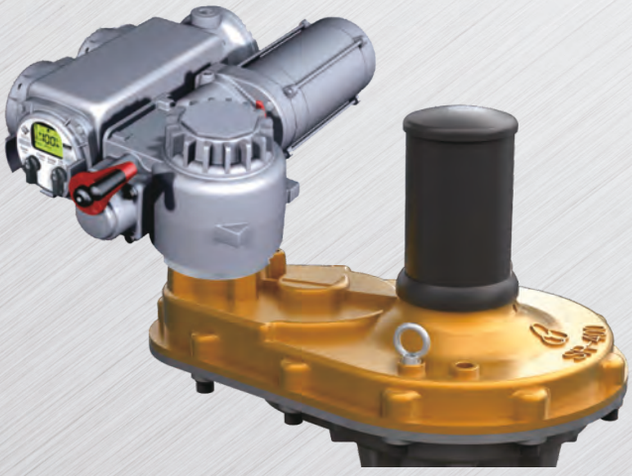

Size and component specification in this catalogue are subject to change without prior notice for quality improvement.
* Mark has been changed and updated.

STANDARD TYPE-A

Vertical Input

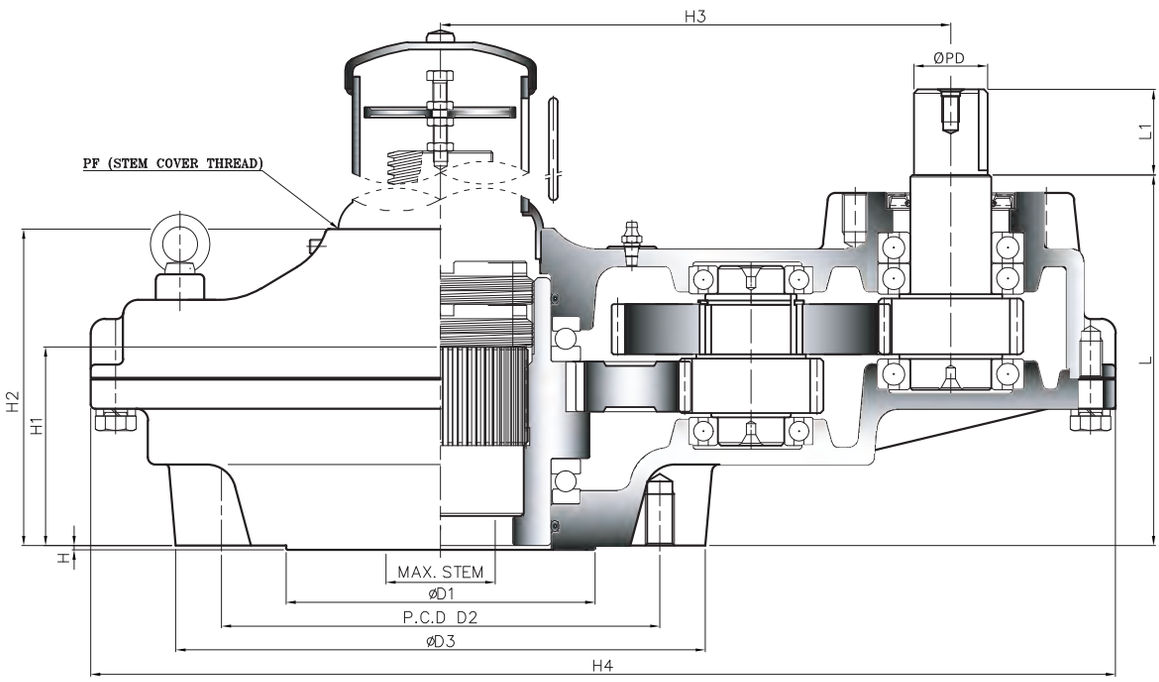

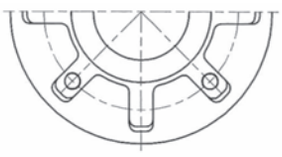

TYPE - A

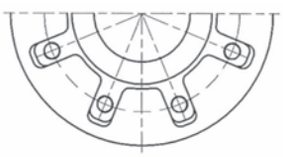

TYPE - B

TYPE - C

Dimension >>>

UNIT : mm

DIM / MODEL	BASE PART							EXTERNAL PART					INPUT SHAFT PART			HAND WHEEL	STEM COVER
	TYPE	FLANGE	ØD1	P.C.D ØD2	P.C.D N-H-DP	ØD3	H	H1	H2	H3	H4	L	L1	ØPD	KEY		
SB-SR50	A	F-12	85	125	4-M12-18	150	3	63	106	161	335	128	34	26	8X7	200	PF2-1/2"
SB-SR100		F-16	130	165	4-M20-30	210		87	143	191.5	400	164				250	PF3"
SB-SR200	B	F-16 (F-20)	140	205	8-M16-24	250	3	91	160	230	480	180	34	32	10X8	300	PF3-1/2"
SB-SR300		F-25	200	254	8-M16-24	300		99	168	279	570	197				400	PF4"
SB-SR350		F-30	230	298	8-M20-30	319		121	196	315	630	218	44	38	12X8	400	PF5"
SB-SR400		F-30	230	298	8-M20-30	350		133	215	346	691	239	44	38	12X8	500	PF6"
SB-SR500		F-35	260	356	8-M30-45	415		165	252	398	790	278	58	50	16X10	500	PF6"
SB-SR550		F-40	300	406	8-M36-55	449		172	263	413	840	302				500	PF6"
SB-SR600		F-40	300	406	8-M36-55	475		182	279	437.5	890	320				500	PF8"
SB-SR700	C	F-48	370	483	12-M36-55	560	5	206	309	503	1030	353	58	50	16X10	630	PF8"
SB-SR750		F-48	370	483	12-M36-55	595		220	334	527	1095	383				710	PF10"
SB-SR800		F-48	370	483	12-M36-55	630		233	354	559	1160	406				710	PF10"

Size and component specification in this catalogue are subject to change without prior notice for quality improvement.
* Mark has been changed and updated.

Feature >>>

- This series suitable for use with Gate & Globe type valve. Also sluice gates and any other type requiring linear motion for thrust and torque applications.
- Unique Top Entry Replaceable Stem Nut. High Tensile Aluminum bronze material providing corrosion and abrasion resistance.
- Castings are Ductile Iron, class 65-45-12 providing high strength and impact resistance.
- Heavy duty roller bearings supporting both radial & axial thrust loads.
- Gears are Machine cut, heat treated and ground for optimum operation. Units are completely O-Ring Sealed suitable for temporary submergence to meet Ip67 class.
- Many options, such as hand wheels, chain wheels, stem covers, position dial indicators are available.

Extension Dial Type >>>

Global Leader
SAMBO
SPIRAL BEVEL GEAR ACTUATORS

The World's Highest Quality!

SAMBO
The World's Highest Quality!

Selection Chart for Manual Operation >>>

SIZE / MODEL	GEAR RATIO (Changeable)	MAX. STEM ACCEPTANCE		BASE MOUNTING OPTION & STANDARD	MAX. THRUST CAPACITY		MAX. TORQUE CAPACITY		WEIGHT
		TW	KEY		KN	lbf	N–m	Ft . lbf	Kg
SB–SR50	2~10 : 1	40	32 (10X8)	F–10, F–12	113	25400	370	273	16
SB–SR100	2.5~12 : 1	55	45 (14X9)	F–14, F–16	141	31700	980	723	35
SB–SR200	3~12 : 1	62	52 (16X10)	F–14, F–16, (F–20)	190	42710	1500	1106	48
SB–SR300	3~13 : 1	72	60 (18X11)	F–16, (F–20), F–25	288	64750	2500	1844	70
SB–SR350	4~13 : 1	85	72 (20X12)	F–25, F–30	350	78680	3500	2581	101
SB–SR400	4~14 : 1	98	84 (22X14)	F–25, F–30	400	89920	5200	3835	132
SB–SR500	4~15 : 1	110	95 (28X16)	F–30, F–35	510	114650	7800	5753	220
SB–SR550	4~15 : 1	120	105 (28X16)	F–35, F–40	1500	337210	10400	7671	273
SB–SR600	5~16 : 1	130	115 (32X18)	F–35, F–40	2310	519300	13000	9588	325
SB–SR700	5~17 : 1	150	130 (36X20)	F–40, F–48	2500	562020	17600	12981	448
SB–SR750	5~17 : 1	160	140 (36X20)	F–48	3450	775590	21000	15489	539
SB–SR800	5~17 : 1	180	160 (40X22)	F–48	4100	921700	32000	23602	630

Size and component specification in this catalogue are subject to change without prior notice for quality improvement.
* Mark has been changed and updated.

STANDARD TYPE-A Twin Shaft

Thrust & Torque(Twin Shaft) Vertical Input with Single Reduction Gear Attachment

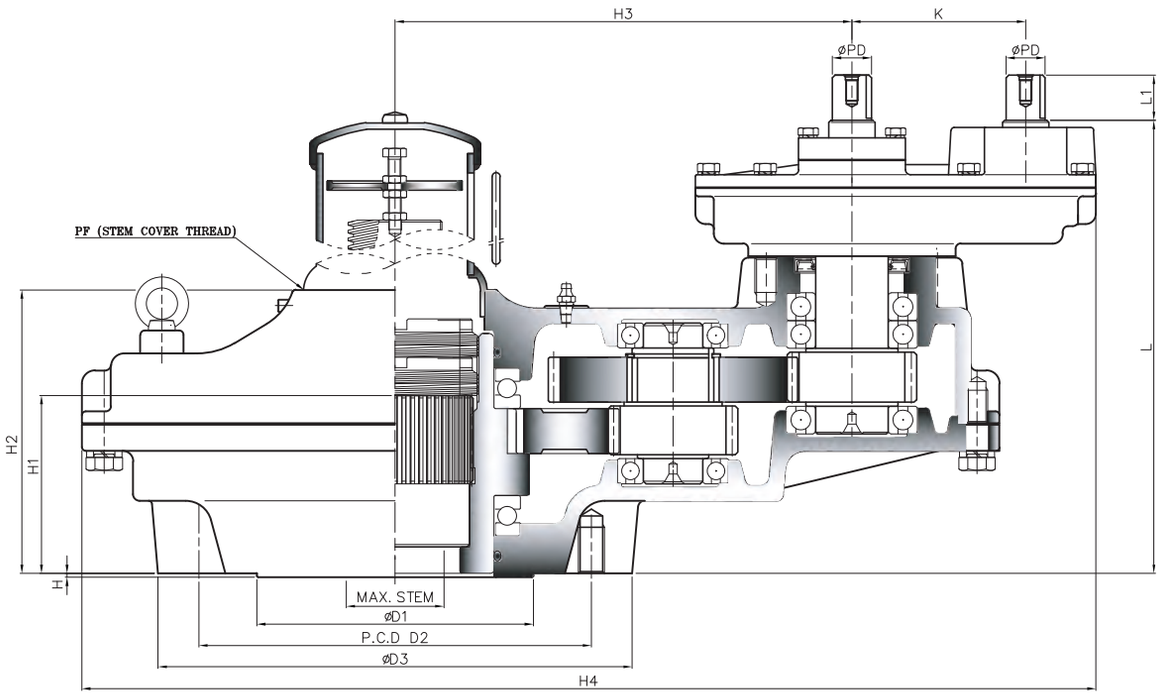

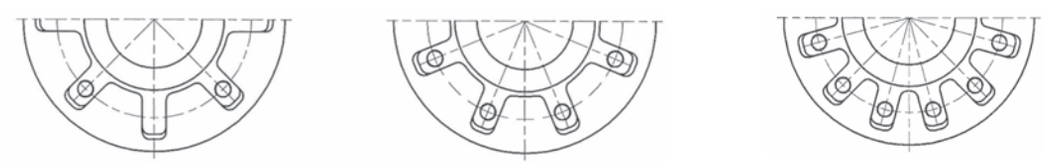

TYPE - A TYPE - B TYPE - C

Dimension >>>

UNIT : mm

DIM / MODEL	BASE PART							EXTERNAL PART						INPUT SHAFT PART			HAND WHEEL	STEM COVER
	TYPE	FLANGE	ØD1	P.C.D ØD2	P.C.D N-H-DP	ØD3	H	H1	H2	H3	H4	K	L	L1	ØPD	KEY		
SB-SR50-1ST	A	F-12	85	125	4-M12-18	150	3	63	106	161	393	79	205	34	26	8X7	200	PF2-1/2"
SB-SR100-1ST		F-16	130	165	4-M20-30	210		87	143	191.5	453.5		238				250	PF3"
SB-SR200-1ST	B	F-16 (F-20)	140	205	8-M16-24	250	3	91	160	230	531	93	258.5	34	26	8X7	300	PF3-1/2"
SB-SR300-1ST		F-25	200	254	8-M16-24	300		99	168	279	615		276.5				400	PF4"
SB-SR350-1ST		F-30	230	298	8-M20-30	319		121	196	315	705	121	321	34	32	10X8	400	PF5"
SB-SR400-1ST		F-30	230	298	8-M20-30	350		133	215	346	756		341				500	PF6"
SB-SR500-1ST		F-35	260	356	8-M30-45	415		165	252	398	841		382				500	PF6"
SB-SR550-1ST		F-40	300	406	8-M36-55	449		172	263	413	915	145	411	44	38	12X8	500	PF6"
SB-SR600-1ST		F-40	300	406	8-M36-55	475		182	279	437.5	987	169	455	44	38	12X8	500	PF8"
SB-SR700-1ST	C	F-48	370	483	12-M36-55	560	5	206	309	503	1101	169	486	44	38	12X8	630	PF8"
SB-SR750-1ST		F-48	370	483	12-M36-55	595		220	334	527	1240	230	606	58	50	16X10	710	PF10"
SB-SR800-1ST		F-48	370	483	12-M36-55	630		233	354	559	1295	230	628	58	50	16X10	710	PF10"

Size and component specification in this catalogue are subject to change without prior notice for quality improvement.
* Mark has been changed and updated.

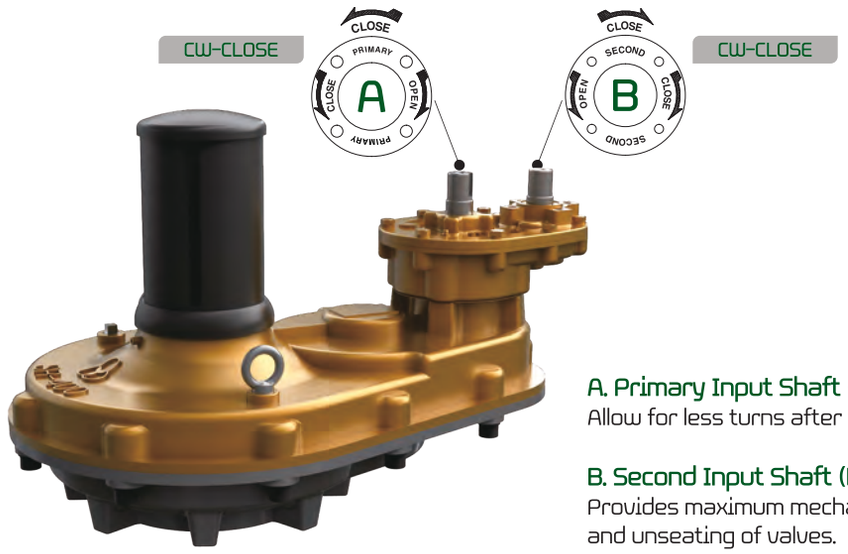

SAMBO
The World's Highest Quality!

A. Primary Input Shaft (High Speed Input Shaft)
Allow for less turns after valve has been unseating.

B. Second Input Shaft (Low Speed Input Shaft)
Provides maximum mechanical advantage for seating and unseating of valves.

Feature >>>

- This series suitable for use with Gate & Globe type valve. Also sluice gates and any other type requiring linear motion for thrust and torque applications.
- Unique Top Entry Replaceable Stem Nut. High Tensile Aluminum bronze material providing corrosion and abrasion resistance.
- Castings are Ductile Iron, class 65-45-12 providing high strength and impact resistance.
- Heavy duty roller bearings supporting both radial & axial thrust loads.
- Gears are Machine cut, heat treated and ground for optimum operation. Units are completely O-Ring Sealed suitable for temporary submergence to meet Ip67 class.
- Many options, such as hand wheels, stem covers are available.

Global Leader
SAMBO
SPIRAL BEVEL GEAR ACTUATORS

The World's Highest Quality!

Selection Chart for Manual Operation >>>

SIZE / MODEL	MAX. GEAR RATIO (Changeable)		MAX. STEM ACCEPTANCE		BASE MOUNTING OPTION & STANDARD	MAX. THRUST CAPACITY		MAX. TORQUE CAPACITY		WEIGHT
	PRIMARY	SECOND	TW	KEY		KN	lbf	N–m	Ft . lbf	Kg
SB–SR50–1ST	10 : 1	20 : 1	40	32 (10X8)	F–10, F–12	113	25400	370	273	20
SB–SR100–1ST	12 : 1	24 : 1	55	45 (14X9)	F–14, F–16	141	31700	980	723	39
SB–SR200–1ST	12 : 1	30 : 1	62	52 (16X10)	F–14, F–16, (F–20)	190	42710	1500	1106	56
SB–SR300–1ST	13 : 1	32.5 : 1	72	60 (18X11)	F–16, (F–20), F–25	288	64750	2500	1844	78
SB–SR350–1ST	13 : 1	32.5 : 1	85	72 (20X12)	F–25, F–30	350	78680	3500	2581	111
SB–SR400–1ST	14 : 1	35.4 : 1	98	84 (22X14)	F–25, F–30	400	89920	5200	3835	144
SB–SR500–1ST	15 : 1	35.4 : 1	110	95 (28X16)	F–30, F–35	510	114650	7800	5753	232
SB–SR550–1ST	15 : 1	52.5 : 1	120	105 (28X16)	F–35, F–40	1500	337210	10400	7671	293
SB–SR600–1ST	16 : 1	64 : 1	130	115 (32X18)	F–35, F–40	2310	519300	13000	9588	353
SB–SR700–1ST	17 : 1	68 : 1	150	130 (36X20)	F–40, F–48	2500	562020	17600	12981	476
SB–SR750–1ST	17 : 1	85 : 1	160	140 (36X20)	F–48	3450	775590	21000	15489	589
SB–SR800–1ST	17 : 1	85 : 1	180	160 (40X22)	F–48	4100	921700	32000	23602	702

Size and component specification in this catalogue are subject to change without prior notice for quality improvement.
* Mark has been changed and updated.

STANDARD TYPE-B

Horizontal Input

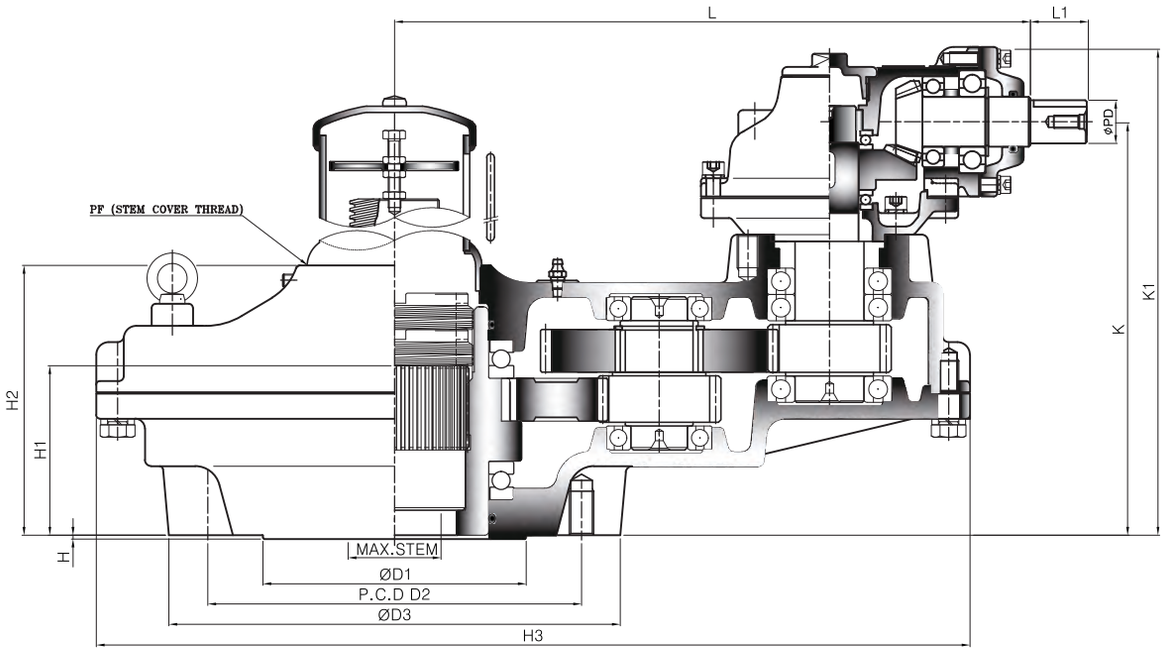

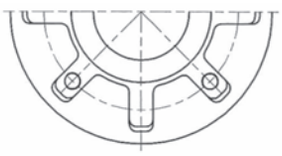

TYPE - A

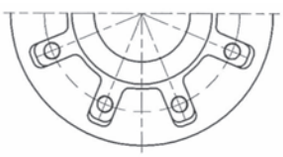

TYPE - B

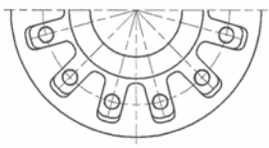

TYPE - C

Dimension >>>

UNIT : mm

DIM / MODEL	BASE PART							EXTERNAL PART						INPUT SHAFT PART			HAND WHEEL	STEM COVER
	TYPE	FLANGE	ØD1	P.C.D		ØD3	H	H1	H2	H3	K	K1	L	L1	ØPD	KEY		
				ØD2	N-H-DP													
SB-SR50-2B	A	F-12	85	125	4-M12-18	150	3	63	106	335	174	214	250	34	26	8X7	250	PF2-1/2"
SB-SR100-2B		F-16	130	165	4-M20-30	210		87	143	400	204	244	280.5				250	PF3"
SB-SR200-2B	B	F-16 (F-20)	140	205	8-M16-24	250	3	91	160	480	239	289	351	34	26	8X7	300	PF3-1/2"
SB-SR300-2B		F-25	200	254	8-M16-24	300		99	168	570	249	299	400				400	PF4"
SB-SR350-2B		F-30	230	298	8-M20-30	319		121	196	630	278	328	446				400	PF5"
SB-SR400-2B		F-30	230	298	8-M20-30	350		133	215	691	298.5	348.5	477				500	PF6"
SB-SR500-2B		F-35	260	356	8-M30-45	415		165	252	790	383	448	586	34	32	10X8	630	PF6"
SB-SR550-2B		F-40	300	406	8-M36-55	449		172	263	840	404	470	601				630	PF6"
SB-SR600-2B		F-40	300	406	8-M36-55	475		182	279	890	424.5	489.5	625.5				630	PF8"
SB-SR700-2B	C	F-48	370	483	12-M36-55	560	5	206	309	1030	508	573	711	34	32	10X8	630	PF8"
SB-SR750-2B		F-48	370	483	12-M36-55	595		220	334	1095	553	635	793	44	38	12X8	710	PF10"
SB-SR800-2B		F-48	370	483	12-M36-55	630		236	354	1160	575	657	825	44	38	12X8	710	PF10"

Size and component specification in this catalogue are subject to change without prior notice for quality improvement.
* Mark has been changed and updated.

SAMBO
The World's Highest Quality!

Feature >>>

- This series suitable for use with Gate & Globe type valve. Also sluice gates and any other type requiring linear motion for thrust and torque applications.
- Unique Top Entry Replaceable Stem Nut. High Tensile Aluminum bronze material providing corrosion and abrasion resistance.
- Castings are Ductile Iron, class 65-45-12 providing high strength and impact resistance.
- Heavy duty roller bearings supporting both radial & axial thrust loads.
- Gears are Machine cut, heat treated and ground for optimum operation. Units are completely O-Ring Sealed suitable for temporary submergence to meet Ip67 class.
- Many options, such as hand wheels, stem covers are available.

Global Leader
SAMBO
SPIRAL BEVEL GEAR ACTUATORS

The World's Highest Quality!

Selection Chart for Manual Operation >>>

SIZE / MODEL	GEAR RATIO (Changeable)	MAX. STEM ACCEPTANCE		BASE MOUNTING OPTION & STANDARD	MAX. THRUST CAPACITY		MAX. TORQUE CAPACITY		WEIGHT
		TW	KEY		KN	lbf	N–m	Ft . lbf	Kg
SB–SR50–2B	4~20 : 1	40	32 (10X8)	F–10, F–12	113	25400	370	273	21
SB–SR100–2B	5~24 : 1	55	45 (14X9)	F–14, F–16	141	31700	980	723	40
SB–SR200–2B	7.5~30 : 1	62	52 (16X10)	F–14, F–16, (F–20)	190	42710	1500	1106	56
SB–SR300–2B	7.5~32 : 1	72	60 (18X11)	F–16, (F–20), F–25	288	64750	2500	1844	78
SB–SR350–2B	12~39 : 1	85	72 (20X12)	F–25, F–30	350	78680	3500	2581	110
SB–SR400–2B	12~42 : 1	98	84 (22X14)	F–25, F–30	400	89920	5200	3835	142
SB–SR500–2B	16~60 : 1	110	95 (28X16)	F–30, F–35	510	114650	7800	5753	253
SB–SR550–2B	16~60 : 1	120	105 (28X16)	F–35, F–40	1500	337210	10400	7671	306
SB–SR600–2B	20~64 : 1	130	115 (32X18)	F–35, F–40	2310	519300	13000	9588	358
SB–SR700–2B	25~85 : 1	150	130 (36X20)	F–40, F–48	2500	562020	17600	12981	492
SB–SR750–2B	27.5~93.5 : 1	160	140 (36X20)	F–48	3450	775590	21000	15489	600
SB–SR800–2B	27.5~93.5 : 1	180	160 (40X22)	F–48	4100	921700	32000	23602	707

Size and component specification in this catalogue are subject to change without prior notice for quality improvement.
* Mark has been changed and updated.

STANDARD TYPE-C High Load
Thrust & Torque Vertical Input

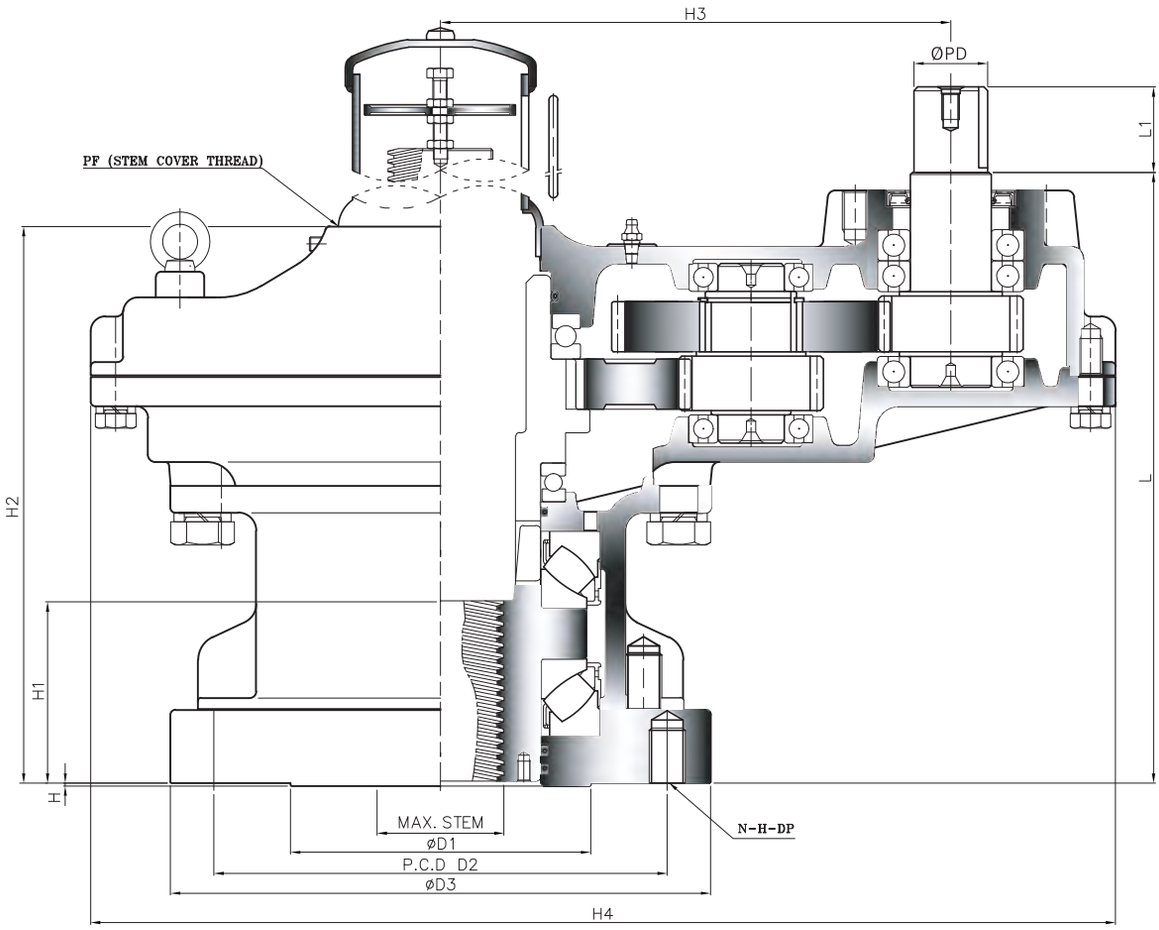

TYPE - B TYPE - C

Dimension >>>

UNIT : mm

DIM / MODEL	BASE PART							EXTERNAL PART					INPUT SHAFT PART			HAND WHEEL	STEM COVER
	TYPE	FLANGE	ØD1	P.C.D ØD2	P.C.D N-H-DP	ØD3	H	H1	H2	H3	H4	L	L1	ØPD	KEY		
SB-SR200H	B	F-25	200	254	8-M16-24	300	3	99	317	230	480	337	34	32	10X8	300	PF3-1/2"
SB-SR300H		F-30	230	298	8-M20-30	350		118	351	279	570	380				400	PF4"
SB-SR350H		F-30	230	298	8-M20-30	350		118	388	315	630	410	44	38	12X8	400	PF5"
SB-SR400H		F-35	260	356	8-M30-45	415		143	412	346	691	436	44	38	12X8	500	PF6"
SB-SR500H		F-35	260	356	8-M30-45	415		155	473	398	790	499	58	50	16X10	500	PF6"
SB-SR550H		F-40	300	406	8-M36-55	475		170	528.5	413	840	569				500	PF6"
SB-SR600H		F-40	300	406	8-M36-55	475		170	520	437.5	890	563				500	PF8"
SB-SR700H	C	F-48	370	483	12-M36-55	560	5	197	613	503	1030	657	58	50	16X10	630	PF8"
SB-SR750H		F-48	370	483	12-M36-55	560		217	668	527	1095	717				710	PF10"
SB-SR800H		F-48	370	483	12-M36-55	560		217	689	559	1160	746				710	PF10"

Size and component specification in this catalogue are subject to change without prior notice for quality improvement.
* Mark has been changed and updated.

SAMBO
The World's Highest Quality!

Feature >>>

- This series suitable for use with Gate & Globe type valve. Also sluice gates and any other type requiring linear motion for thrust and torque applications.
- Unique Top Entry Replaceable Stem Nut. High Tensile Aluminum bronze material providing corrosion and abrasion resistance.
- Castings are Ductile Iron, class 65-45-12 providing high strength and impact resistance.
- Heavy duty roller bearings supporting both radial & axial thrust loads.
- Gears are Machine cut, heat treated and ground for optimum operation. Units are completely O-Ring Sealed suitable for temporary submergence to meet Ip67 class.
- Many options, such as hand wheels, stem covers are available.

Global Leader
SAMBO
SPIRAL BEVEL GEAR ACTUATORS

The World's Highest Quality!

Selection Chart for Manual Operation >>>

SIZE / MODEL	GEAR RATIO (Changeable)	MAX. STEM ACCEPTANCE		BASE MOUNTING OPTION & STANDARD	MAX. THRUST CAPACITY		MAX. TORQUE CAPACITY		WEIGHT
		TW	KEY		KN	lbf	N–m	Ft . lbf	Kg
SB–SR200H	3~12 : 1	65	55 (16X10)	(F–20), F–25	1080	242800	2900	2139	78
SB–SR300H	3~13 : 1	80	70 (20X12)	F–25, F–30	1710	384400	4500	3319	126
SB–SR350H	4~13 : 1	80	70(20X12)	F–25, F–30	1710	384400	7000	5163	157
SB–SR400H	4~14 : 1	95	85 (22X14)	F–25, F–30, F–35	2450	550800	9800	7228	188
SB–SR500H	4~15 : 1	110	95 (25X14)	F–25, F–30, F–35	2900	651900	15000	11063	330
SB–SR550H	4~15 : 1	120	105 (28X16)	F–30, F–35, F–40	3400	764350	19000	14013	402
SB–SR600H	5~16 : 1	130	115 (32X18)	F–30, F–35, F–40	3500	786800	23000	16964	474
SB–SR700H	5~17 : 1	150	130 (36X20)	F–35, F–40, F–48	4700	1056600	37000	27290	710
SB–SR750H	5~17 : 1	160	140 (36X20)	F–48	5000	1124045	46000	33928	852
SB–SR800H	5~17 : 1	170	160 (40X22)	F–48	5200	1169000	58000	42778	994

Size and component specification in this catalogue are subject to change without prior notice for quality improvement.
* Mark has been changed and updated.

STANDARD TYPE-C High Load

Thrust & Torque (Twin Shaft) Vertical Input with Single Reduction Gear Attachment

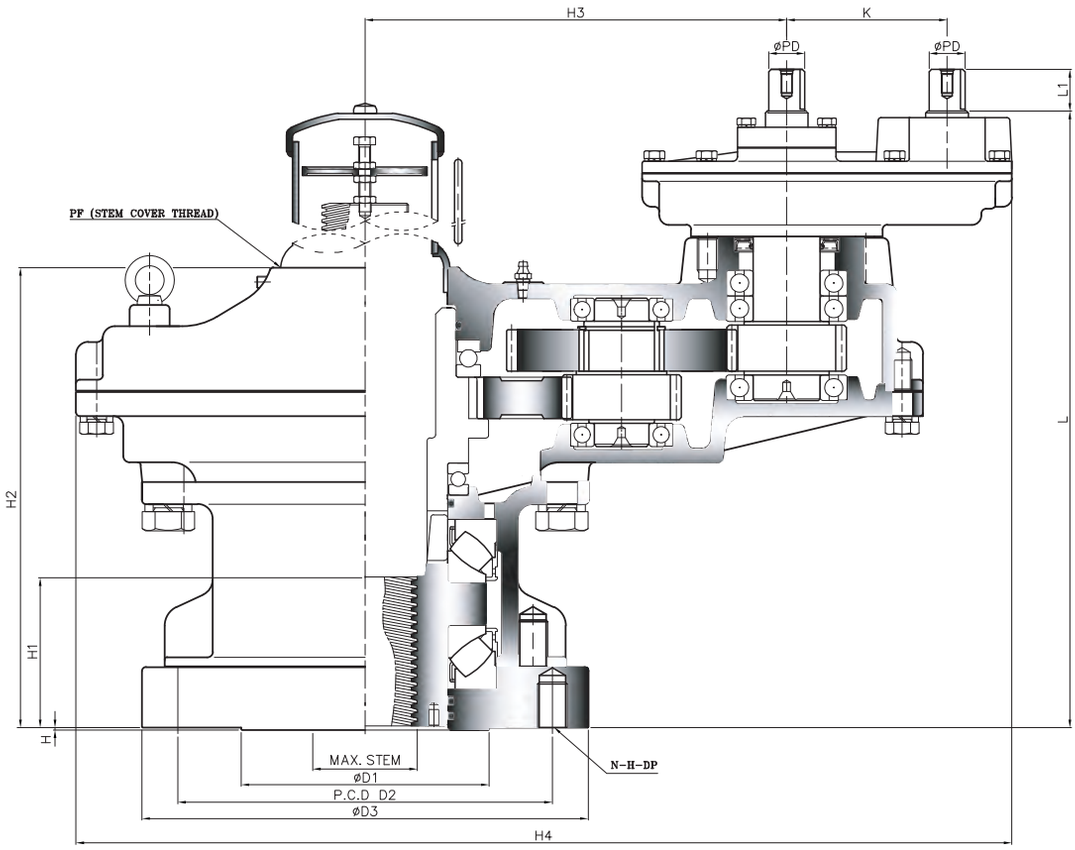

TYPE - B TYPE - C

Dimension >>>

UNIT : mm

DIM / MODEL	BASE PART							EXTERNAL PART						INPUT SHAFT PART			HAND WHEEL	STEM COVER
	TYPE	FLANGE	ØD1	P.C.D ØD2	P.C.D N-H-DP	ØD3	H	H1	H2	H3	H4	K	L	L1	ØPD	KEY		
SB-SR200H-1ST	B	F-25	200	254	8-M16-24	300	3	99	317	230	531	93	416	34	26	8X7	300	PF3-1/2"
SB-SR300H-1ST		F-30	230	298	8-M20-30	350		118	351	279	615		459				400	PF4"
SB-SR350H-1ST		F-30	230	298	8-M20-30	350		118	388	315	705	121	513	34	32	10X8	500	PF6"
SB-SR400H-1ST		F-35	260	356	8-M30-45	415		143	412	346	756		538				500	PF6"
SB-SR500H-1ST		F-35	260	356	8-M30-45	415		155	473	398	841		603				500	PF6"
SB-SR550H-1ST		F-40	300	406	8-M36-55	475		170	528.5	413	915	145	678				500	PF6"
SB-SR600H-1ST		F-40	300	406	8-M36-55	475		170	520	437.5	987	169	696	44	38	12X8	500	PF8"
SB-SR700H-1ST	C	F-48	370	483	12-M36-55	560	5	197	613	503	1101	169	790	44	38	12X8	630	PF8"
SB-SR750H-1ST		F-48	370	483	12-M36-55	560		217	668	527	1240	230	940	58	50	16X10	710	PF10"
SB-SR800H-1ST		F-48	370	483	12-M36-55	560		217	689	559	1295	230	963	58	50	16X10	710	PF10"

Size and component specification in this catalogue are subject to change without prior notice for quality improvement.
* Mark has been changed and updated.

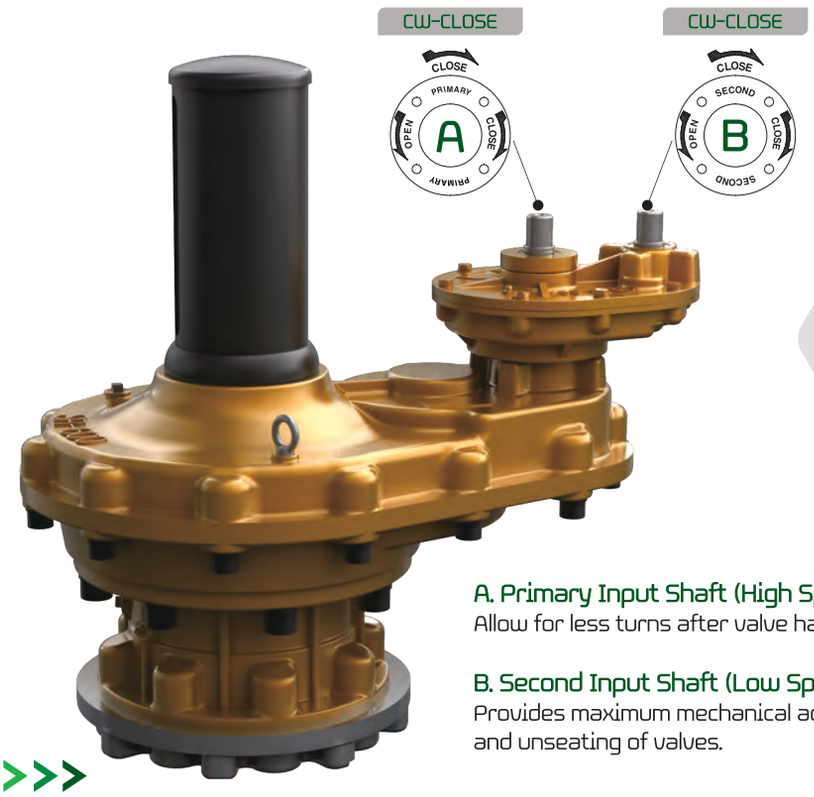

SAMBO
The World's Highest Quality!

A. Primary Input Shaft (High Speed Input Shaft)
Allow for less turns after valve has been unseating.

B. Second Input Shaft (Low Speed Input Shaft)
Provides maximum mechanical advantage for seating and unseating of valves.

Feature >>>

- This series suitable for use with Gate & Globe type valve. Also sluice gates and any other type requiring linear motion for thrust and torque applications.
- Unique Top Entry Replaceable Stem Nut. High Tensile Aluminum bronze material providing corrosion and abrasion resistance.
- Castings are Ductile Iron, class 65-45-12 providing high strength and impact resistance.
- Heavy duty roller bearings supporting both radial & axial thrust loads.
- Gears are Machine cut, heat treated and ground for optimum operation. Units are completely O-Ring Sealed suitable for temporary submergence to meet Ip67 class.
- Many options, such as hand wheels, stem covers are available.

Global Leader
SAMBO
SPIRAL BEVEL GEAR ACTUATORS

The World's Highest Quality!

Selection Chart for Manual Operation >>>

SIZE / MODEL	MAX. GEAR RATIO (Changeable)		MAX. STEM ACCEPTANCE		BASE MOUNTING OPTION & STANDARD	MAX. THRUST CAPACITY		MAX. TORQUE CAPACITY		WEIGHT
	PRIMARY	SECOND	TW	KEY		KN	lbf	N–m	Ft. lbf	Kg
SB–SR200H–1ST	12 : 1	30 : 1	65	55 (16X10)	(F–20), F–25	1080	242800	2900	2139	86
SB–SR300H–1ST	13 : 1	33 : 1	80	70 (20X12)	F–25, F–30	1710	384400	4500	3319	134
SB–SR350H–1ST	13 : 1	39 : 1	80	70 (20X12)	F–25, F–30	1710	384400	7000	5163	167
SB–SR400H–1ST	14 : 1	42 : 1	95	85 (22X14)	F–25,F–30,F–35	2450	550800	9800	7228	200
SB–SR500H–1ST	15 : 1	45 : 1	110	95 (25X14)	F–25,F–30,F–35	2900	651900	15000	11063	342
SB–SR550H–1ST	15 : 1	52.5 : 1	120	105 (28X16)	F–30,F–35,F–40	3400	764350	19000	14013	422
SB–SR600H–1ST	16 : 1	64 : 1	130	115 (32X18)	F–30,F–35,F–40	3500	786800	23000	16964	502
SB–SR700H–1ST	17 : 1	68 : 1	150	130 (36X20)	F–35,F–40,F–48	4700	1056600	37000	27290	738
SB–SR750H–1ST	17 : 1	85 : 1	160	140 (36X20)	F–48	5000	1124045	46000	33928	902
SB–SR800H–1ST	17 : 1	85 : 1	170	160 (40X22)	F–48	5200	1169000	58000	42778	1066

Size and component specification in this catalogue are subject to change without prior notice for quality improvement.
* Mark has been changed and updated.

STANDARD TYPE-C High Load
Thrust & Torque Horizontal Input

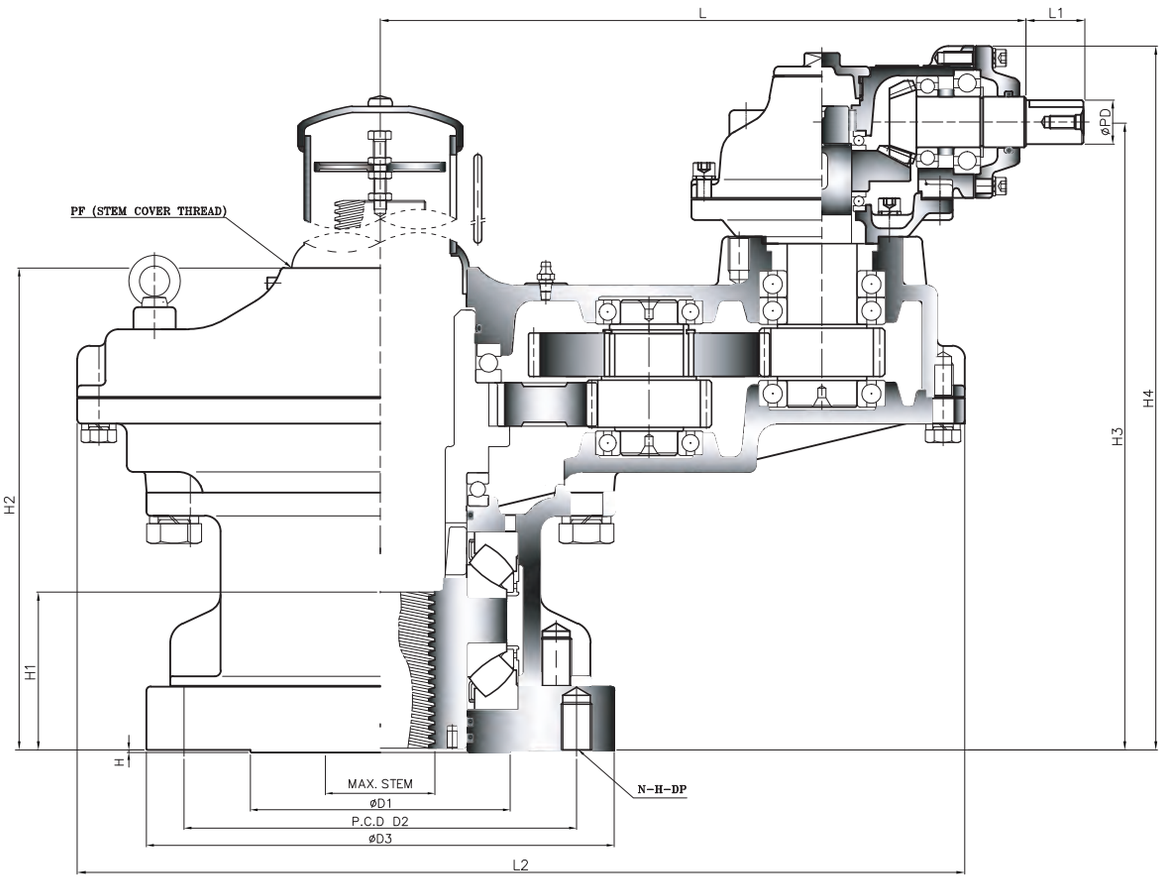

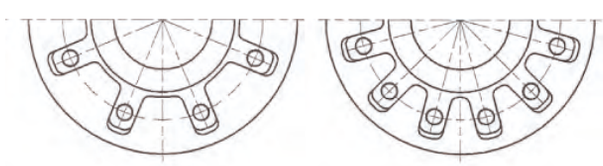

TYPE - B TYPE - C

Dimension >>>

UNIT : mm

DIM / MODEL	BASE PART							EXTERNAL PART						INPUT SHAFT PART			HAND WHEEL	STEM COVER
	TYPE	FLANGE	ØD1	P.C.D ØD2	P.C.D N-H-DP	ØD3	H	H1	H2	H3	H4	L2	L	L1	ØPD	KEY		
SB-SR200H-2B	B	F-25	200	254	8-M16-24	300	3	99	317	396	446	480	351	34	26	8X7	300	PF3-1/2"
SB-SR300H-2B		F-30	230	298	8-M20-30	350		118	351	432	482	570	400				400	PF4"
SB-SR350H-2B		F-30	230	298	8-M20-30	350		118	388	469	519	630	446				400	PF6"
SB-SR400H-2B		F-35	260	356	8-M30-45	415		143	412	495.5	545.5	691	477	34	32	10X8	500	PF6"
SB-SR500H-2B		F-35	260	356	8-M30-45	415		155	473	603.5	668.5	790	586				500	PF6"
SB-SR550H-2B		F-40	300	406	8-M36-55	475		170	528.5	678	737	840	601				500	PF6"
SB-SR600H-2B		F-40	300	406	8-M36-55	475		170	520	665.5	730	890	625.5				500	PF8"
SB-SR700H-2B	C	F-48	370	483	12-M36-55	560	5	197	613	781	846	1030	711	34	32	10X8	630	PF8"
SB-SR750H-2B		F-48	370	483	12-M36-55	560		217	668	887	969	1095	793	44	38	12X8	710	PF10"
SB-SR800H-2B		F-48	370	483	12-M36-55	560		217	689	910	993	1160	825	44	38	12X8	710	PF10"

SAMBO
The World's Highest Quality!

Feature >>>

- This series suitable for use with Gate & Globe type valve. Also sluice gates and any other type requiring linear motion for thrust and torque applications.
- Unique Top Entry Replaceable Stem Nut. High Tensile Aluminum bronze material providing corrosion and abrasion resistance.
- Castings are Ductile Iron, class 65-45-12 providing high strength and impact resistance.
- Heavy duty roller bearings supporting both radial & axial thrust loads.
- Gears are Machine cut, heat treated and ground for optimum operation. Units are completely O-Ring Sealed suitable for temporary submergence to meet Ip67 class.
- Many options, such as hand wheels, stem covers are available.

Global Leader
SAMBO
SPIRAL BEVEL GEAR ACTUATORS

The World's Highest Quality!

Selection Chart for Manual Operation >>>

SIZE / MODEL	GEAR RATIO (Changeable)	MAX. STEM ACCEPTANCE		BASE MOUNTING OPTION & STANDARD	MAX. THRUST CAPACITY		MAX. TORQUE CAPACITY		WEIGHT
		TW	KEY		KN	lbf	N–m	Ft . lbf	Kg
SB–SR200H–2B	7.5~30 : 1	65	55 (16X10)	(F–20), F–25	1080	242800	2900	2139	86
SB–SR300H–2B	7.5~32 : 1	80	70 (20X12)	F–25, F–30	1710	384400	4500	3319	134
SB–SR350H–2B	12~42 : 1	80	70 (20X12)	F–25, F–30	1710	384400	7000	5163	166
SB–SR400H–2B	12~42 : 1	95	85 (22X14)	F–25, F–30, F–35	2450	550800	9800	7228	198
SB–SR500H–2B	16~60 : 1	110	95 (25X14)	F–25, F–30, F–35	2900	651900	15000	11063	363
SB–SR550H–2B	16~60 : 1	120	105 (28X16)	F–30,F–35,F–40	3400	764350	19000	14013	435
SB–SR600H–2B	20~64 : 1	130	115 (32X18)	F–30, F–35, F–40	3500	786800	23000	16964	507
SB–SR700H–2B	25~85 : 1	150	130 (36X20)	F–35, F–40, F–48	4700	1056600	37000	27290	754
SB–SR750H–2B	27.5~93.5 : 1	160	140 (36X20)	F–48	5000	1124045	46000	33928	913
SB–SR800H–2B	27.5~93.5 : 1	170	160 (40X22)	F–48	5200	1169000	58000	42778	1071

Size and component specification in this catalogue are subject to change without prior notice for quality improvement.
* Mark has been changed and updated.

Worm Gear Actuators

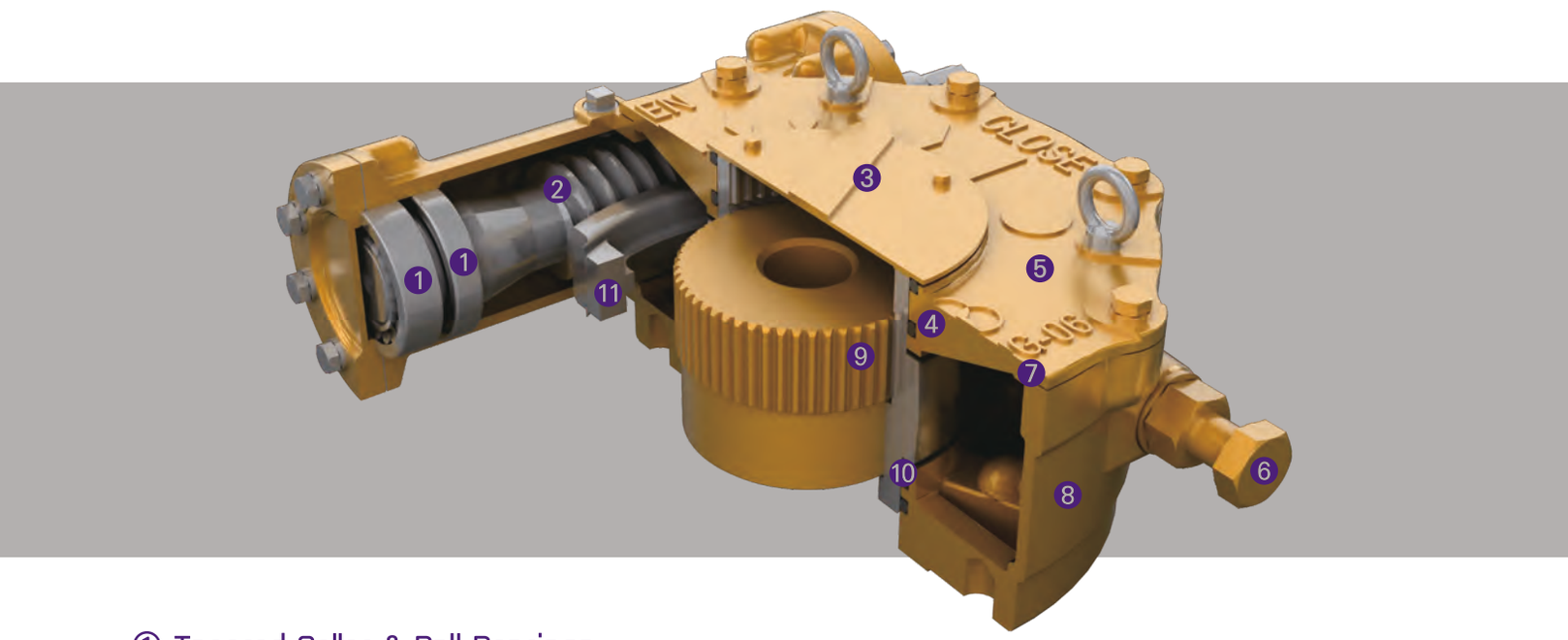

① Tapered Roller & Ball Bearings

The Worm is supported on tapered roller bearings which support both the axial and radial forces generated by the gearings.They have excellent load bearing capacity.

② Worm

1045 heat treated steel, with ground and polished worm threads. Precision cutting of the threads provides minimum backlash between the worm gearand worm.

③ Indicator Plate

Pointer provides positive position indication. The pointer can easily be re-positioned if required.

④ Sealing

The drive sleeve is supplied with a oil seal at the top and large cross-section o-ring at the bottom. This sealing method allows the units to be rated for submersible service to Ip67 standards.

⑤ Cover

Legends, 'Close-Open-Close' are cast directly on the cover.This permits operation in either direction with position indication.

⑥ External Adjustable Stops

The stop bolts allow for position accuracy of +/-5°.
Each bolt also includes Buna-N sealing washers or prevent water intrusion

Size and component specification in this catalogue are subject to change without prior notice for quality improvement.
* Mark has been changed and updated.

Global Leader
SAMBO
SPIRAL BEVEL GEAR ACTUATORS

The World's Highest Quality!

This series of Worm Gears range from 360N.m (260ft-lbf) to 970,000N.m (710,000 ft-lbf) >>>

Units are available with single, double and triple reduction spur gear.
Other options available are : vertical input

⑦ Gaskets

Each end of the worm assembly is equipped with special design material(non-asbestos), which are completely water resistant.

⑧ Housing

All external castings are Ductile Iron. Class 65-45-12, Tensile Strength of 65,000 psi.

⑨ Splined Bushings

All units furnished with removable splined bushings to permit accurate position between the gear drive and the valve shaft.

⑩ Thrust Washer

The drive sleeve is furnished with hardened steel thrust washers above and below warm gear.
This minuimizes frictional looseness between the gear and the ductile iron castings.

⑪ Worm Gear

Standard material is Ductile Iron, Grade 80-55-06, Suitable most industrial applications.
Option is aluminum bronze having a tensile strength of 85,000 psi.
Normally required for motorized applications involving modulating service and is also a requirement to meet the AWWA standards.

Size and component specification in this catalogue are subject to change without prior notice for quality improvement.
* Mark has been changed and updated.

Worm Gear Actuator Assembly

STANDARD TYPE - A

Horizontal Input

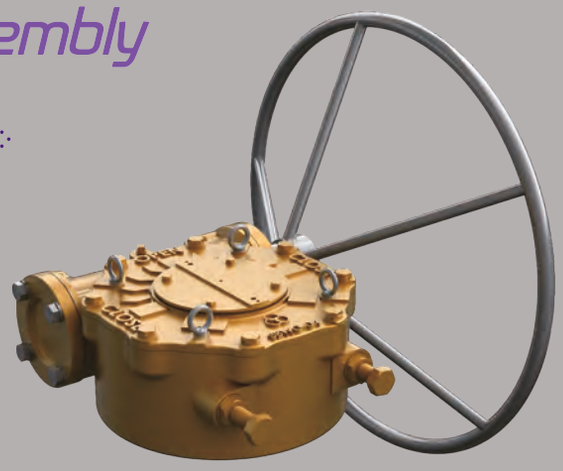

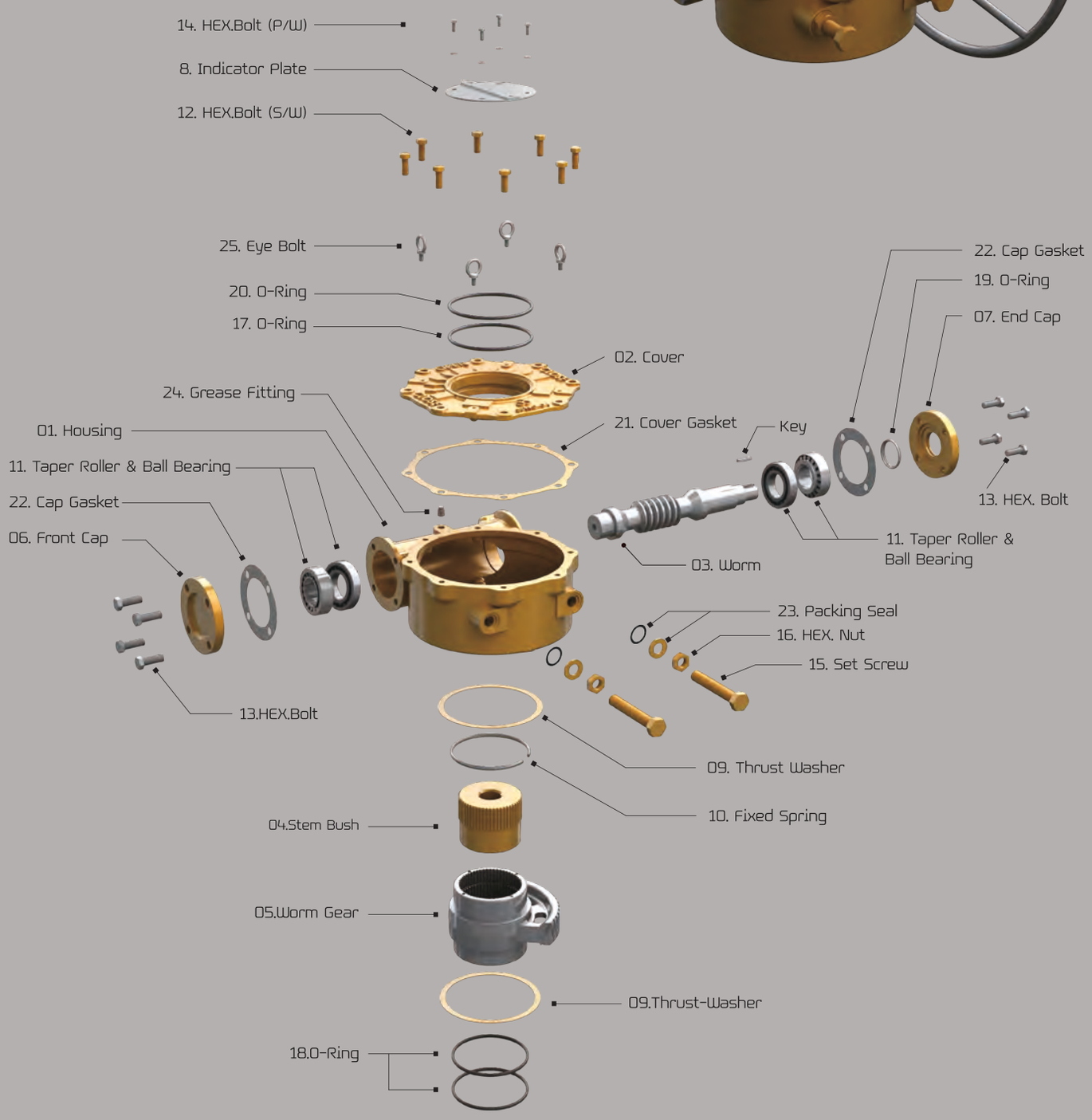

Worm Gear

Size and component specification in this catalogue are subject to change without prior notice for quality improvement.
* Mark has been changed and updated.

Part List & Material >>>

	NO	DESCRIPTION	MATERIAL			REMARK
			NAME	JIS	ASTM	
STANDARD	1	Housing	Ductile Iron	FCD–450	A536–65–45–12	NOTE. 1
	2	Cover	Ductile Iron	FCD–450	A536–65–45–12	NOTE. 1
	3	Worm	Carbon Steel	S45C	A576–1045	NOTE. 2
	4	Stem Bush	Ductile Iron	FCD–450	A536–65–45–12	
	5	Worm Gear	Ductile Iron	FCD–600	A536–80–55–06	B148–C95800(ALBC3)
	6	Front Cap	Ductile Iron	FCD–450	A536–65–45–12	
	7	End Cap	Ductile Iron	FCD–450	A536–65–45–12	
	8	Indicator Plate	Steel + EP			
	9	Thrust Washer	Steel			
	10	Fixed Spring	Steel			
	11	Taper Roller & Ball Bearing	Special Steel	SUJ2	A295–52100	
	12	HEX. Bolt	Alloy Steel	SCM435	A322–4135	
	13	HEX. Bolt	Alloy Steel	SCM435	A322–4135	
	14	HEX. Bolt (P/W)	Stainless Steel			
	15	Set Screw	Carbon Steel	S45C	A576–1045	
	16	HEX. Nut	Carbon Steel	S45C	A576–1045	
	17	O–Ring	Silicon			NOTE. 4
	18	O–Ring	Silicon			
	19	O–Ring	Silicon			
	20	O–Ring	Silicon			
	21	Cover Gasket	Non – Asbestos			VALQUA 6601
	22	Cap Gasket	Non – Asbestos			
	23	Packing Seal	Silicon			
	24	Grease Fitting	Steel + Galvanizing			
	25	Eye Bolt	Steel + Galvanizing			
OPTION	OP–01.	Hand Wheel	Steel Pipe	SGP	A53	HANDLE PART NOTE. 5
	OP–02.	Key	Carbon Steel	S45C	A576–1045	
	OP–03.	Name Plate	Stainless Steel			
	OP–04.	Washer	Stainless Steel			
	OP–05.	HEX.Bolt (S/W)	Stainless Steel			

Material Detail : Option and Material Changes >>>

1. All castings are Ductile Iron, FCD-450 (ASTM Class 65-45-12)
2. In case of option for special request, it can be worked Nickel coating, high tensile stainless.
3. Also, the material can be changed as ALBC3(Aluminium Bronze), steel(A576-1045), A439 Gr D2C (Austenitic ductile iron casting) and etc.
4. O-Ring Seal & Lubricant : Standard is Silicon & Buna "N", temperature range -20° C to +120° C (-4° F to +248° F).
   Standard lubricant is Zenith EPSB 2, temperature Range -20° C to +200° C (-4° F to +392° F).
   Other option are : High Temperature Viton O-Ring Grade V75, Temperature Range -30° C to +200° C (-22° F to +392° F)
   Lubricant - Zenith SYN WS2 Temperature Range -30° C~400° C (-22° F~752° F)
   Low Temperature Silicon O-Ring, Temperature Range -60° C to + 150° C(-76° F to 302° F)
   Lubricant - Zenith SBLT600, Temperature Range -60° C~120° C (-76° F~248° F)
5. SAMBO offers a wide variety of Handwheels, Chainwheels, Input Shaft, Locking Devices and etc.
6. SAMBO offers a wide variety of stem cover, stainless steel, Polycarbonate.
   Paint : Unless specified, units are supplied with vp134 Red epoxy primer. SAMBO can provide finish coating upon request.

Size and component specification in this catalogue are subject to change without prior notice for quality improvement.
* Mark has been changed and updated.

Worm Gear Actuator Assembly

STANDARD TYPE – A

Horizontal Input
with Single Reduction Gear Attachment

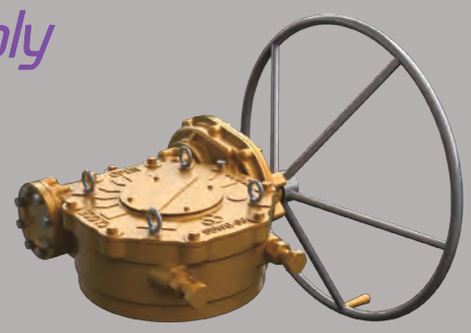

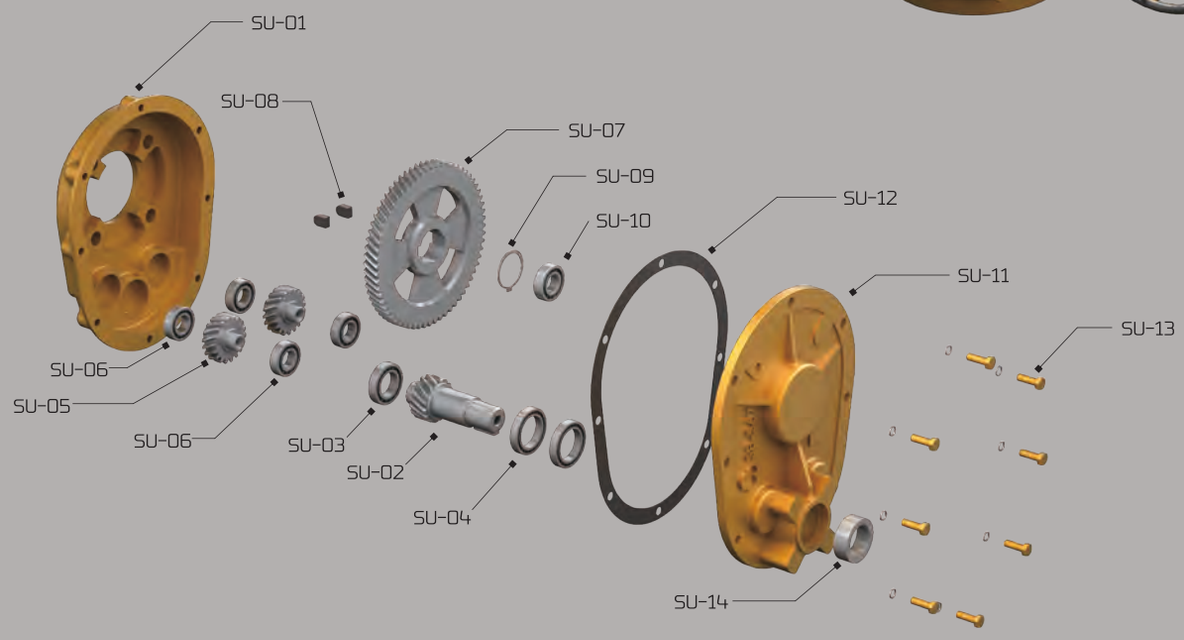

Part List & Material >>>

NO	DESCRIPTION	MATERIAL			REMARK
		NAME	JIS	ASTM	
1	Housing	Ductile Iron	FCD–450	A536–65–45–12	NOTE. 1
2	Cover	Ductile Iron	FCD–450	A536–65–45–12	NOTE. 1
3	Worm	Carbon Steel	S45C	A576–1045	NOTE. 2
4	Stem Bush	Ductile Iron	FCD–450	A536–65–45–12	
5	Worm Gear	Ductile Iron	FCD–600	A536–80–55–06	B148–C95800(ALBC3)
6	Front Cap	Ductile Iron	FCD–450	A536–65–45–12	
7	End Cap	Ductile Iron	FCD–450	A536–65–45–12	
8	Indicator Plate	Steel + EP			
9	Thrust Washer	Steel			
10	Fixed Spring	Steel			
11	Taper Roller Bearing	Special Steel	SUJ2	A295–52100	
12	HEX. Bolt (S/W)	Alloy Steel	SCM435	A322–4135	
13	HEX. Bolt	Alloy Steel	SCM435	A322–4135	
14	HEX. Bolt (P/W)	Stainless Steel			
15	Set Screw	Carbon Steel	S45C	A576–1045	
16	HEX. Nut	Carbon Steel	S45C	A576–1045	
17	O–Ring	Silicon			NOTE. 3
18	O–Ring	Silicon			
19	O–Ring	Silicon			
20	O–Ring	Silicon			
21	Cover Gasket	Non – Asbestos			VALQUA 6601
22	Cap Gasket	Non – Asbestos			

NO	DESCRIPTION	MATERIAL			REMARK
		NAME	JIS	ASTM	
23	Packing Seal	Silicon			
24	Grease Fitting	Steel + Galvanizing			
25	Eye Bolt	Steel + Galvanizing			
SU–01	Support Housing	Ductile Iron	FCD–450	A536–65–45–12	
SU–02	Helical Pinion	Carbon Steel	S45C	A576–1045	
SU–03	Radial Ball B/R	Special Steel	SUJ2	A295–52100	
SU–04	Radial Ball B/R	Special Steel	SUJ2	A295–52100	
SU–05	Idle Gear	Carbon Steel	S45C	A576–1045	
SU–06	Radial Ball B/R	Speciial Steel	SUJ2	A295–52100	
SU–07	Helical Gear	Carbon Steel	S45C	A576–1045	
SU–08	Key (1R)	Carbon Steel	S45C	A576–1045	
SU–09	Snap Ring	Carbon Steel	S45C	A576–1045	
SU–10	Radial Ball B/R	Special Steel	SUJ2	A295–52100	
SU–11	Support Cover	Ductile Iron	FCD–450	A536–65–45–12	
SU–12	S–Cover Gasket	Nonasbestos			VALQUA6601
SU–13	HEX.Bolt (S/W)	Alloy Steel	SCM435	A322–4135	
SU–14	Oil–Seal	Buna N	NBR		
OP–01	Hand Wheel	Steel Pipe	SGP	A53	OPTION HANDLE PART
OP–02	Key(1R)	Carbon Steel	S45C	A576–1045	
OP–03	Name Plate	Stainless Steel			
OP–04	Washer	Stainless Steel			
OP–05	HEX. Bolt (S/W)	Stainless Steel			

Size and component specification in this catalogue are subject to change without prior notice for quality improvement.
* Mark has been changed and updated.

STANDARD TYPE – A

Horizontal Input
with Double Reduction Gear Attachment

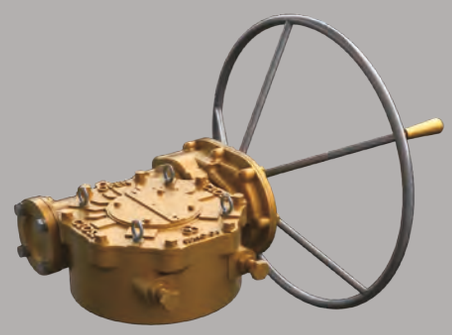

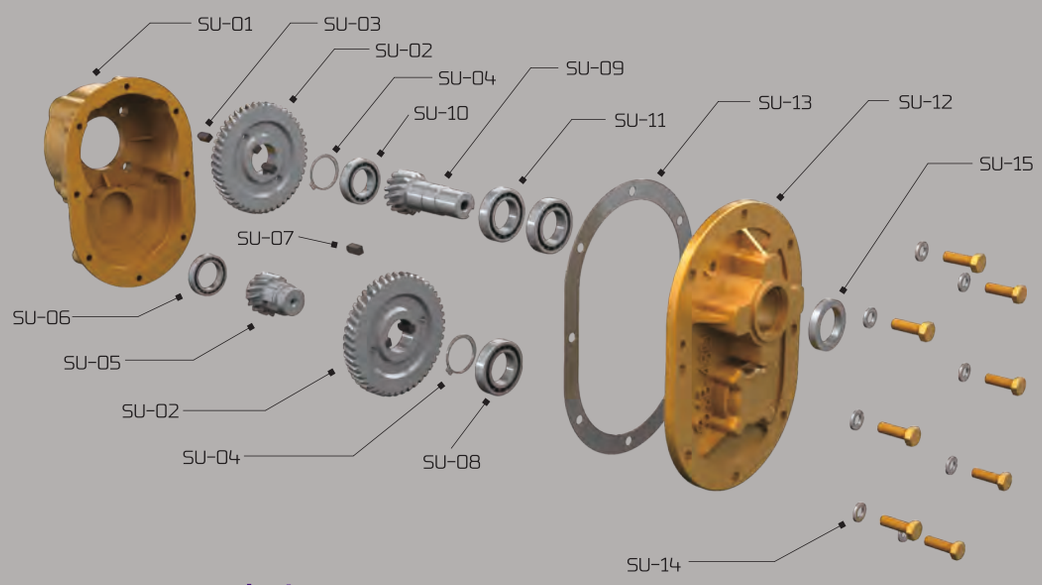

Part List & Material >>>

NO	DESCRIPTION	MATERIAL			REMARK
		NAME	JIS	ASTM	
1	Housing	Ductile Iron	FCD–450	A536–65–45–12	NOTE. 1
2	Cover	Ductile Iron	FCD–450	A536–65–45–12	NOTE. 1
3	Worm	Carbon Steel	S45C	A576–1045	NOTE. 2
4	Stem Bush	Ductile Iron	FCD–450	A536–65–45–12	
5	Worm Gear	Ductile Iron	FCD–600	A536–80–55–06	B148–C95800(ALBC3)
6	Front Cap	Ductile Iron	FCD–450	A536–65–45–12	
7	End Cap	Ductile Iron	FCD–450	A536–65–45–12	
8	Indicator Plate	Steel + EP			
9	Thrust Washer	Steel			
10	Fixed Spring	Steel			
11	Taper Roller Bearing	Special Steel	SUJ2	A295–52100	
12	HEX. Bolt (S/W)	Alloy Steel	SCM435	A322–4135	
13	HEX. Bolt	Alloy Steel	SCM435	A322–4135	
14	HEX. Bolt (P/W)	Stainless Steel			
15	Set Screw	Carbon Steel	S45C	A576–1045	
16	HEX. Nut	Carbon Steel	S45C	A576–1045	
17	O–Ring	Silicon			NOTE. 3
18	O–Ring	Silicon			
19	O–Ring	Silicon			
20	O–Ring	Silicon			
21	Cover Gasket	Non – Asbestos			VALQUA 6601
22	Cap Gasket	Non – Asbestos			

NO	DESCRIPTION	MATERIAL			REMARK
		NAME	JIS	ASTM	
23	Packing Seal	Silicon			
24	Grease Fitting	Steel + Galvanizing			
25	Eye Bolt	Steel + Galvanizing			
SU–01	Support Housing	Ductile Iron	FCD–450	A536–65–45–12	
SU–02	Helical Gear	Carbon Steel	S45C	A576–1045	
SU–03	Key (1R)	Carbon Steel	S45C	A576–1045	
SU–04	Snap Ring	Carbon Steel	S45C	A576–1045	
SU–05	Idle Gear	Carbon Steel	S45C	A576–1045	
SU–06	Radial Ball B/R	Special Steel	SUJ2	A295–52100	
SU–07	Key (1R)	Carbon Steel	S45C	A576–1045	
SU–08	Radial Ball B/R	Special Steel	SUJ2	A295–52100	
SU–09	Helical Pinion	Carbon Steel	S45C	A576–1045	
SU–10	Radial Ball B/R	Special Steel	SUJ2	A295–52100	
SU–11	Radial Ball B/R	Special Steel	SUJ2	A295–52100	
SU–12	Support Cover	Ductile Iron	FCD–450	A536–65–45–12	
SU–13	S–Cover Gasket	Nonasbestos			VALQUA6601
SU–14	HEX. Bolt (S/W)	Stainless	SCM435	A322–4135	
SU–15	Oil–Seal	Buna N	NBR		
OP–01	Hand Wheel	Steel Pipe	SGP	A53	OPTION HANDLE PART
OP–02	Key (1R)	Carbon Steel	S45C	A576–1045	
OP–03	Name Plate	Stainless Steel			
OP–04	Washer	Stainless Steel			
OP–05	HEX. Bolt (S/W)	Stainless Steel			

Size and component specification in this catalogue are subject to change without prior notice for quality improvement.
* Mark has been changed and updated.

SAMBO

INDEX

Size and component specification in this catalogue are subject to change without prior notice for quality improvement.
* Mark has been changed and updated.

PRODUCTS

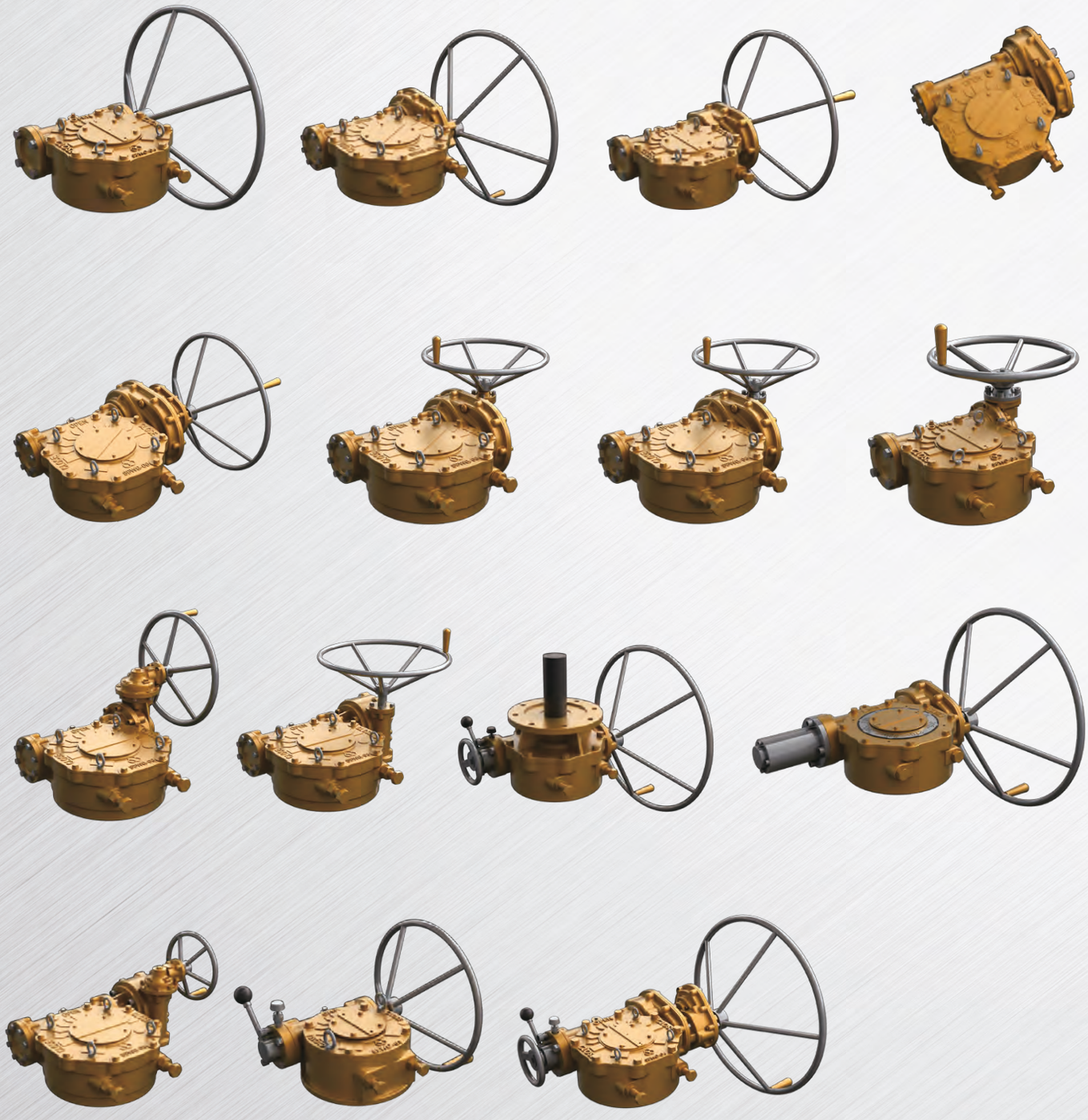

Global Leader
SAMBO
GEAR ACTUATORS for Industrial Valves

The World's Highest Quality!

Size and component specitication in this catalogue are subject to change without prior notice for quality improvement.
* Mark has been changed and updated.

Hand Wheel Type

Worm Standard Handwheel >>>

UNIT : mm

SIZE / MODEL	ΦO.D	ΦD	Φd&KEY	L	L1	ARM Q'TY
WH-200	200	40	Ø16 (6X6)	25	70	3EA
WH-250	250				90	
WH-300	300	50	Ø21 (6X6)	30	110	4EA
WH-350	350				120	
WH-400	400				130	
WH-450	450	60	Ø26 (8X7)	35	150	
WH-500	500				160	5EA
WH-560	560				170	
WH-630	630	70	Ø32 (10X8)	35	190	
WH-710	710				210	
WH-800	800	80	Ø38 (12X8)	45	230	6EA
WH-900	900				250	
WH-1000	1000	90	Ø50 (16X10)	59	270	

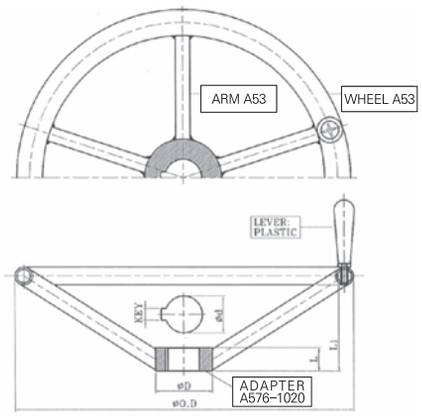

If there is no request from customers, we will make handwheel as per the above table.
As option, the material can be changed and Handwheel size can be suitable for all model.

Worm Solid Handwheel >>>

UNIT : mm

SIZE / MODEL	ΦO.D	ΦD	Φd&KEY	L	L1	ARM Q'TY
WSH-200	200	40	Ø16 (6X6)	25	70	3EA
WSH-250	250				90	
WSH-300	300	50	Ø21 (6X6)	30	110	4EA
WSH-350	350				120	
WSH-400	400				130	
WSH-450	450	60	Ø26 (8X7)	35	150	
WSH-500	500				160	5EA
WSH-560	560				170	
WSH-630	630	70	Ø32 (10X8)	35	190	
WSH-710	710				210	
WSH-800	800	80	Ø38 (12X8)	45	230	6EA
WSH-900	900				250	
WSH-1000	1000	90	Ø50 (16X10)	59	270	

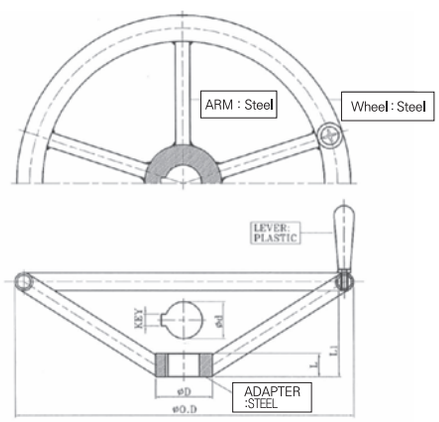

If there is no request from customers, we will make handwheel as per the above table.
As option, the material can be changed and Handwheel size can be suitable for all model.

2" SQUARE NUT Handwheel >>>

UNIT : mm

SIZE / MODEL	ΦO.D	ΦD	Φd&KEY	L	L1	ARM Q'TY
WDNH-200	200	90	Ø16 (6X6)	25	70	3EA
WDNH-250	250				90	
WDNH-300	300		Ø21 (6X6)	30	110	4EA
WDNH-350	350				120	
WDNH-400	400				130	
WDNH-450	450		Ø26 (8X7)	35	150	
WDNH-500	500				160	5EA
WDNH-560	560				170	
WDNH-630	630		Ø32 (10X8)		190	
WDNH-710	710				210	
WDNH-800	800		Ø38 (12X8)		230	6EA
WDNH-900	900				250	
WDNH-1000	1000		Ø50 (16X10)	70	270	

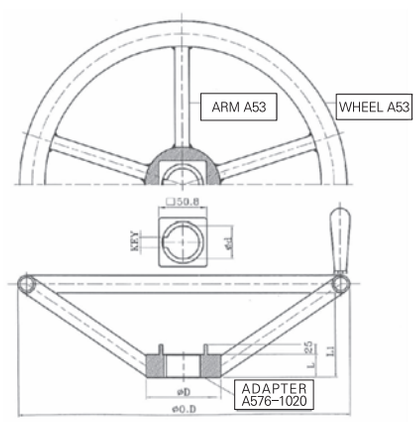

This Handwheel is the type using air impact wrench and if can be made properly according to customer' s request.

Size and component specification in this catalogue are subject to change without prior notice for quality improvement.
* Mark has been changed and updated.

Chain Wheel Type

WORM Standard >>>

UNIT : mm

SIZE / MODEL	A	B	ΦD & KEY
CH-200	200	43	Φ16 (6X6) Φ21 (6X6)
CH-250	250		
CH-300	300	43.5	Φ26 (8X7) Φ32 (10X8)
CH-350	350		
CH-400	400	50	Φ38 (12X8)
CH-450	450		
CH-500	500		
CH-550	550		
CH-600	600		
CH-700	700	51.5	Φ38 (12X8) Φ50 (16X10)
CH-800	800	53	

Gear Type >>>

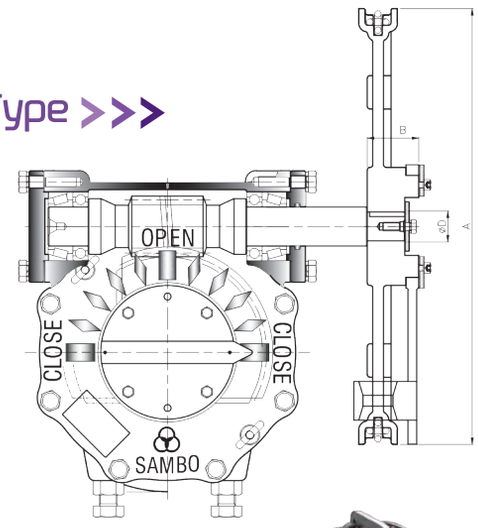

Hammer Type >>>

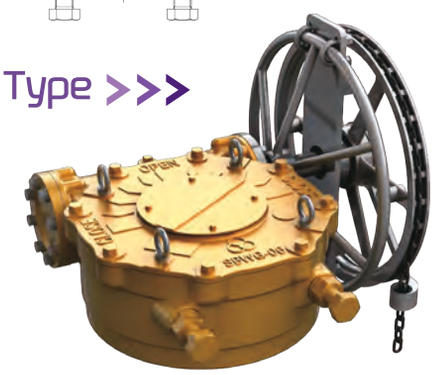

Chainwheel has 2 types

- First, hammer type which is joined with handwheel.
- Second, gear type which is adhered to gear directly.
- material : sprocket rim (FCD-450), guide arm (FCD-450), chain (steel+zn)

Square Adapter >>>

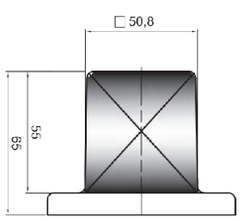

2" Square Nut Adapter

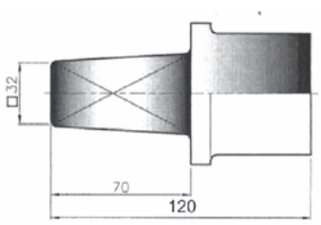

32 Square Nut Adapter

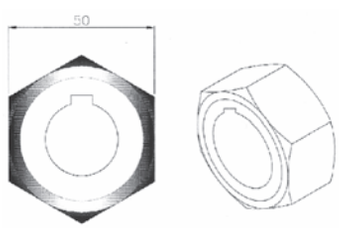

Hexagon Adapter

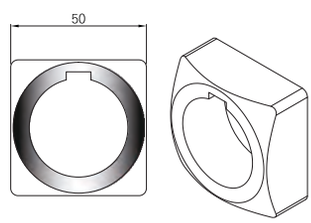

2" Square Nut

Handwheel Selection Chart >>>

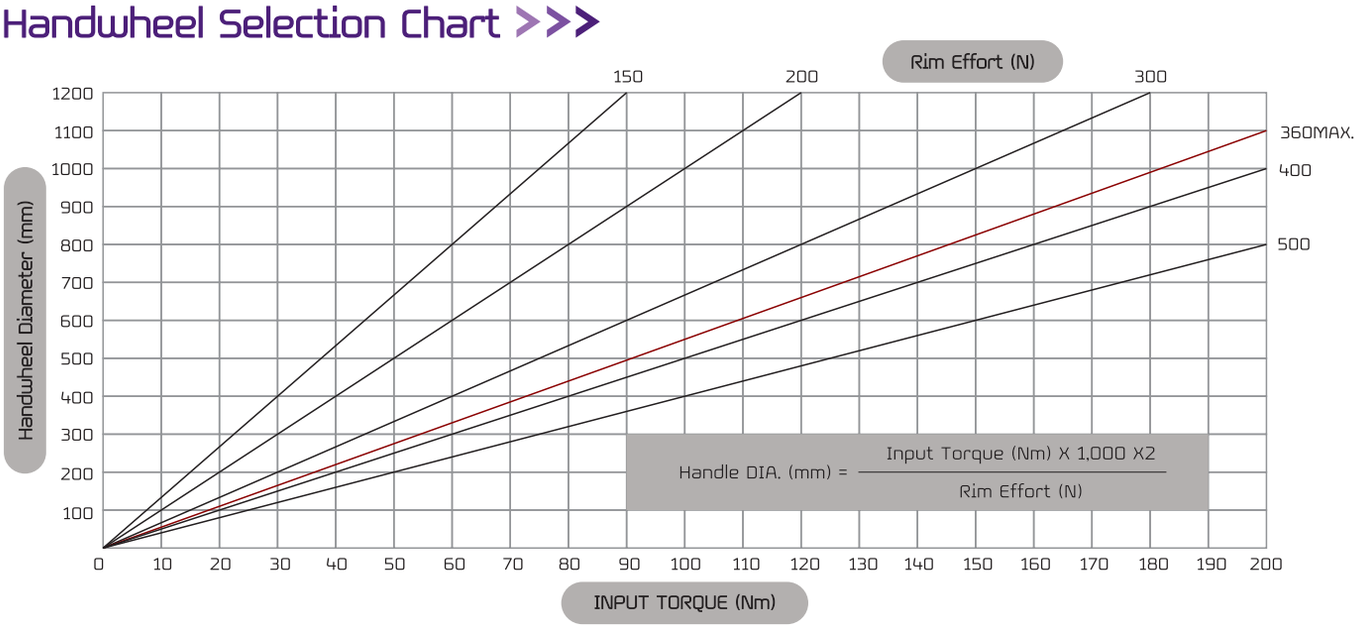

Size and component specification in this catalogue are subject to change without prior notice for quality improvement.
* Mark has been changed and updated.

The Following Instructions should be followed for mounting of the gear to the valve

BUSH INSERT & SETSCREW >>>

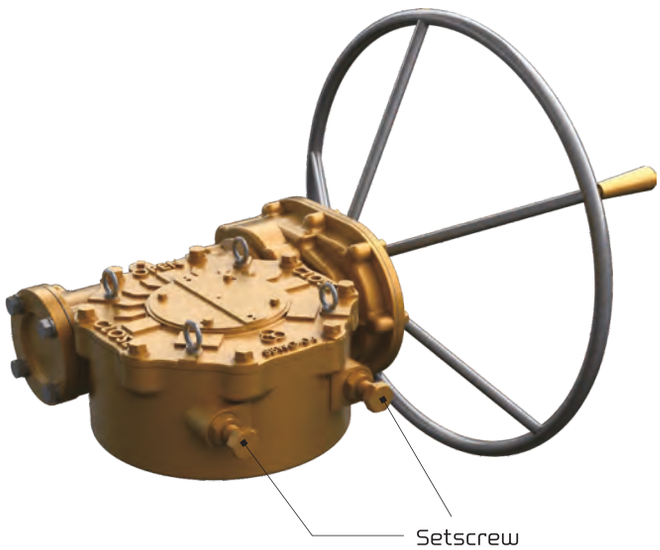

Global Leader
SAMBO
SPIRAL BEVEL GEAR ACTUATORS
The World's Highest Quality!

Bottom Entry

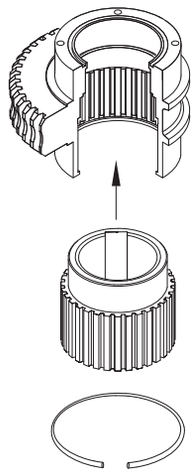

SBWG-0 ~ 35 Series

Upper Entry

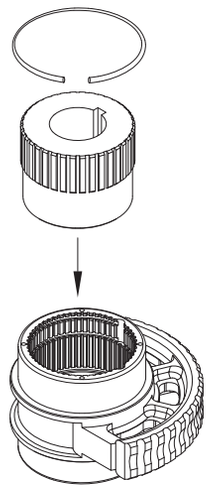

SBWG-04 ~ 13 Series

Stem Bush

Worm Gear

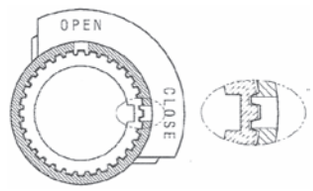

• If it does not match, the position may not be proper.

ADJUSTMENT OF SETSCREW >>>

1. Secure setting for the valve and actuator correctly.
2. After finish setting, finally use to adjust the setscrews of worm gearbox.

WARNING

- SAMBO worm gearboxes are not set at exactly 90 degree.
- After complete valve and actuator, accurately adjust and use setscrews.
- Incorrect setting of setscrews may cause damage and user is responsible for this.

BUSH INSERT >>>

Assembly

1. Turn gear box to see bottom side.
2. Insert bush correctly into the worm gear.
   Insert bush into grooves of worm gear.
   (Match groove and bushing key in a straight line.)
   There is 2 grooves at bottom of worm gear.
   One groove is for open and the other is for close.
3. Fix spring.

CAUTION

- In case of bushing insert, match groove of worm gear and bushing key correctly.
- This groove is marked the position of Caution "Close" or "Open".
- If it does not match, the position may not be proper.

SAMBO
The World's Highest Quality!

Worm Gear

Size and component specification in this catalogue are subject to change without prior notice for quality improvement.
* Mark has been changed and updated.

Chain Wheel Type

Twin Shaft Gear Actuators Type >>>

There are two input shafts in the below support actuator type. One Shaft is for high speed and the other shaft is for low speed.

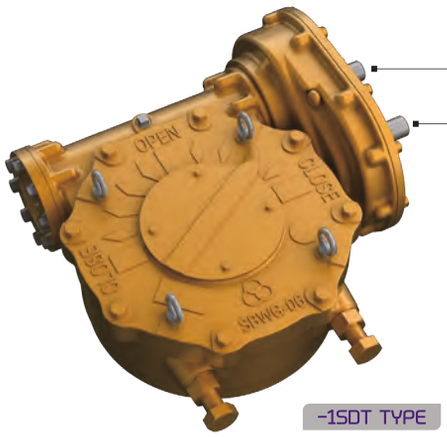

-1SDT TYPE

Second Input Shaft (Low Speed Input Shaft)

Provides maximum mechanical advantage for seating and unseating of valves.

Primary Input Shaft (High Speed Input Shaft)

Allow for less turns after valve has been unseating.

Input / Output Shaft Rotation Options >>>

Right Hand Input

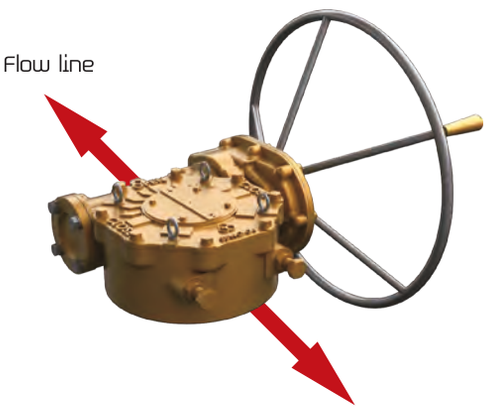

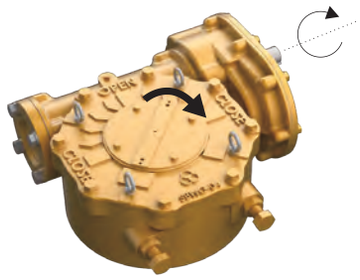

① Right Hand Input
CW in- CW out is most standard
Assembly position "A"

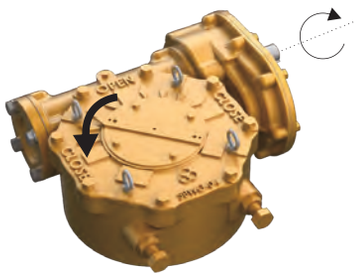

② Right Hand Input
CW in- CCW out Assembly
position "B"

Left Hand Input

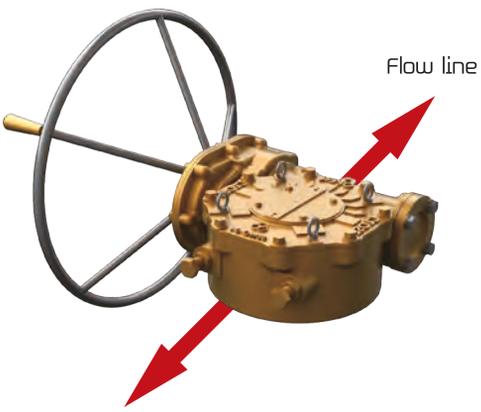

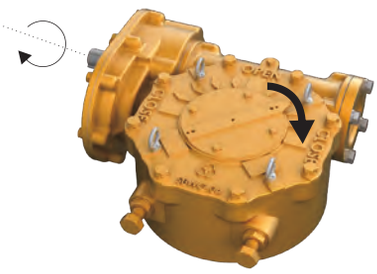

③ Left Hand Input
CW in- CW out is most standard
Assembly position "C"

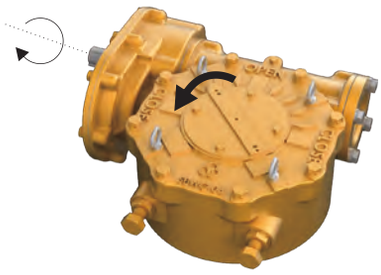

④ Left Hand Input
CW in- CCW out Assembly
position "D"

Size and component specification in this catalogue are subject to change without prior notice for quality improvement.
* Mark has been changed and updated.

STANDARD TYPE-A

Horizontal Input

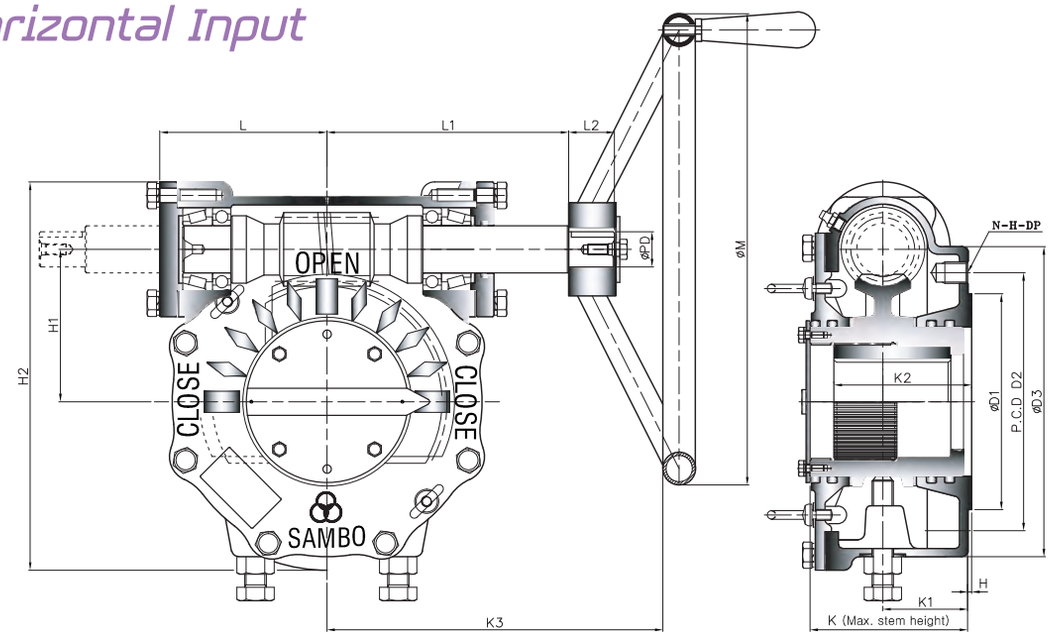

• Pin hole size is same as tap out diameter

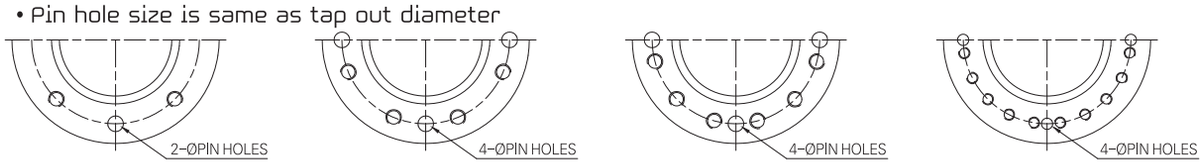

TYPE - A TYPE - B TYPE - C TYPE - D

Dimension >>>

UNIT : mm

DIM / MODEL	BASE PART							EXTERNAL PART								INPUT SHAFT PART			HAND WHEEL
	TYPE	FLANGE	ØD1	P.C.D ØD2	P.C.D N-H-DP	ØD3	H	H1	H2	K	K1	K2	K3	L	L1	L2	ØPD	KEY	
* SBWG-BF	A	F-07	55	70	4-M8-12	110	2	42	132	76	38	38.6	150	64	97	24	16	6X6	200
SBWG-0		F-10	70	102	4-M10-15	135		57	159.5	77	38	43.6	177	71.5	104.5				250
SBWG-00		F-12	85	125	4-M12-18	165		69.5	192	86.5	43	53.6	230	86	138	29	21	6X6	300
SBWG-01		F-14	100	140	4-M16-24	190		82.5	217.5	96	53	65	260	95	147				400
SBWG-02		F-16	130	165	4-M20-30	220		97	257	111.5	58	75.5	294	108	166	34	26	8X7	500
SBWG-03	B	F-16 (F-20)	160	205	8-M16-24	250	3	112	287	118	61	87	324	118	176	34	26	8X7	560
SBWG-35		F-25	200	254	8-M16-24	300		127	327	135	72	100	342	136	194				
SBWG-04		F-25	200	254	8-M16-24	300		153	385.5	147	73	120	370	153	207	34	32	10X8	630
* SBWG-05		F-30	230	298	8-M20-30	350		180	437.5	155	78	141	400	163	217				710
SBWG-55						350		202	484.5	162	80	144	420	183	237				
SBWG-06		F-35	260	356	8-M30-45	415		230	558.5	200	109	173	489	217	286	44	38	12X8	800
SBWG-07		F-40	300	406	8-M36-55	475		280.5	660.5	227	116	209	538	252	320				900
SBWG-75	C	F-48	370	483	12-M36-55	560	5	326	776	246	120	220	617	279	381	58	50	16X10	1000
SBWG-08						560		379	884	254	125	245	652	314	416				
SBWG-09	D	F-60	470	603	20-M36-55	700	5	448.5	1023.5	284	138	270	692	354	456	58	50	16X10	1000
SBWG-10						800		513	1191	352	164	330	814	426	614				
SBWG-11						900		616.5	1399.5	394	181	370	857	468.5	657				
* SBWG-12		F-80	670	813	20-M42-63	1000		711	1621	482	265	415	980	554	702				
* SBWG-13						1000		809	1814	546	301	515	988	609	752				

Size and component specification in this catalogue are subject to change without prior notice for quality improvement.
* Mark has been changed and updated.

Feature >>>

- All mounting bases conform to ISO 5210/1 standards.
- All castings are ductile iron, Class 65-45-12 excellent strength and impact resistance.
- Worm gear material is available in two option.
  - Ductile iron,Class 80-55-06
  - Aluminum bronze, B148-C95800
- Worm is 1045 heat treated Carbon steel.
- Removable splined bushing to permit accurate positioning between gear drive and valve stem.
- Options include hand wheels, chain and etc.

Bushing Type

Splines permit accurate alignment of valve stem key.

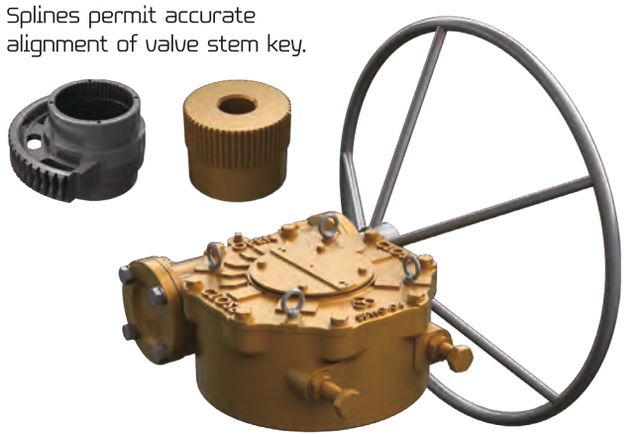

M·O·V OPTION

Worm Gear can be provided with Motor actuator input flanges to accept standard ISO Mounting Base.

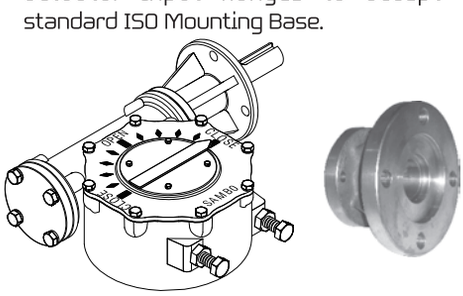

LOCKING DEVICE OPTION

Input can be equipped with a Handwheel locking device for Manually operated units.

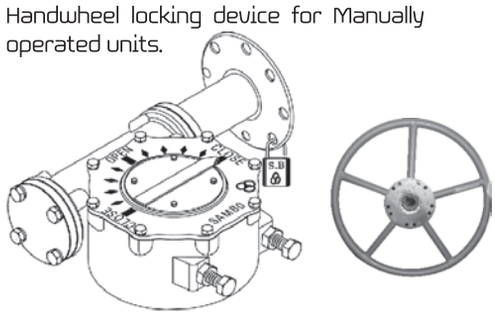

Selection Chart for Manual Operation >>>

SIZE / MODEL	GEAR RATIO	MAX. STEM ACCEPTANCE	BASE MOUNTING OPTION & STANDARD	MAX. TORQUE CAPACITY		WEIGHT
				N–m	Ft . lbf	Kg
* SBWG–BF	32 : 1	20 (6X6)	F–05, F–07	360	266	4
SBWG–0	36 : 1	28 (8X7)	F–07 , F–10	780	575	6
SBWG–00	40 : 1	36 (10X8)	F–10 , F–12	1200	885	10
SBWG–01	44 : 1	46 (14X9)	F–10 , F–12 , F–14	2000	1475	13
SBWG–02	48 : 1	60 (18X11)	F–12 , F–14 , F–16	2800	2065	21
SBWG–03	52 : 1	75 (20X12)	F–14 , F–16 , (F–20)	4300	3172	29
SBWG–35	52 : 1	80 (22X14)	F–16 , (F–20) , F–25	6100	4499	43
SBWG–04	56 : 1	95 (25X14)	F–16 , (F–20) , F–25	10400	7671	56
* SBWG–05	60 : 1	115 (32X18)	(F–20), F–25 , F–30	15900	11727	78
SBWG–55	62 : 1	125 (32X18)	F–25 , F–30	23500	17333	97
SBWG–06	64 : 1	140 (36X20)	F–25 , F–30 , F–35	32800	24192	147
SBWG–07	68 : 1	180 (45X25)	F–30 , F–35 , F–40	51100	37689	243
SBWG–75	66 : 1	210 (50X28)	F–35 , F–40 , F–48	81500	60111	350
SBWG–08	66 : 1	250 (56X32)	F–40 , F–48	121000	89245	473
SBWG–09	66 : 1	280 (63X32)	F–48 , F–60	192500	141981	830
SBWG–10	64 : 1	320 (70X36)	F–60	275000	202830	1330
SBWG–11	68 : 1	360 (80X40)	F–60	442000	326002	2085
* SBWG–12	70 : 1	400 (90X45)	F–60 , (F–80)	610000	449913	2900
* SBWG–13	72 : 1	420 (100X50)	F–60 , (F–80)	970000	715435	3800

Size and component specification in this catalogue are subject to change without prior notice for quality improvement.
* Mark has been changed and updated.

STANDARD TYPE-A

Horizontal Input with Single Reduction Gear Attachment

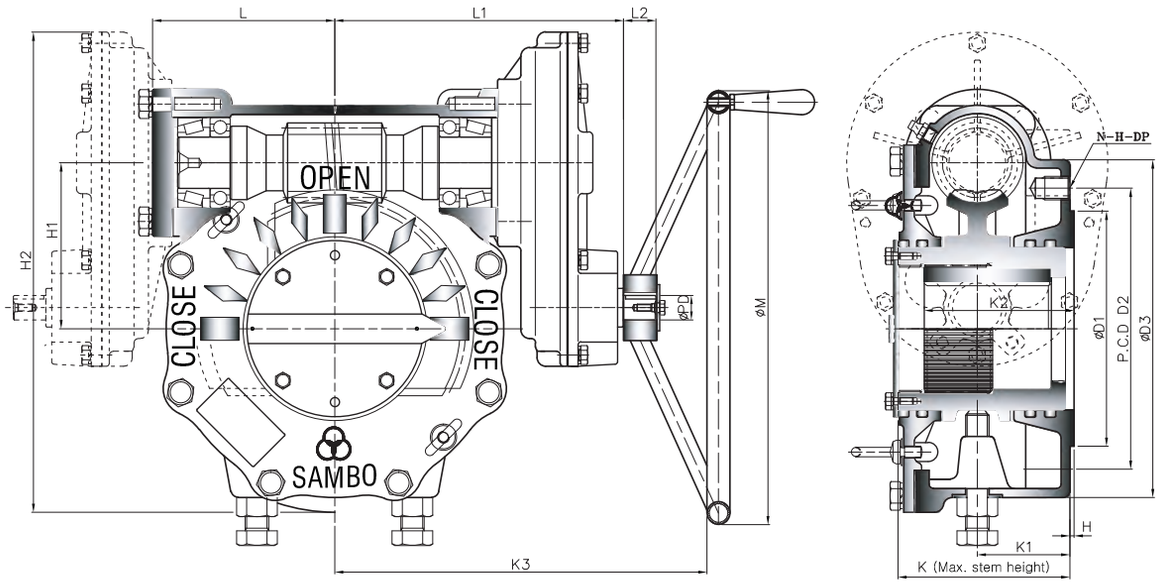

• Pin hole size is same as tap out diameter

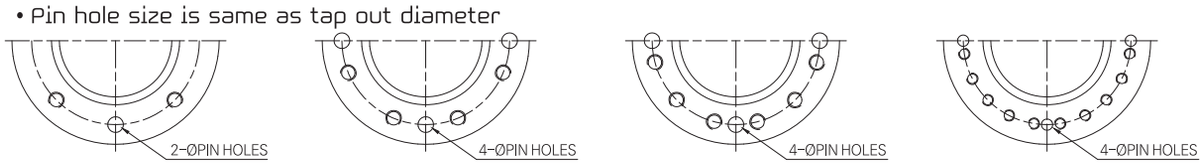

TYPE - A TYPE - B TYPE - C TYPE - D

Dimension >>>

UNIT : mm

MODEL \ DIM	TYPE	FLANGE	ØD1	P.C.D ØD2	P.C.D N-H-DP	ØD3	H	H1	H2	K	K1	K2	K3	L	L1	L2	ØPD	KEY	HAND WHEEL
	BASE PART							EXTERNAL PART								INPUT SHAFT PART			
SBWG-00-1S	A	F-12	85	125	4-M12-18	165	2	69.5	210	86.5	43	53.6	259	86	166	29	21	6X6	300
SBWG-01-1S		F-14	100	140	4-M16-24	190		82.5	235.5	96	53	65	288	95	175				400
SBWG-02-1S		F-16	130	165	4-M20-30	220		97	282	111.5	58	75.5	329	108	190.5	34	26	8X7	500
SBWG-03-1S	B	F-16 (F-20)	160	205	8-M16-24	250	3	112	312	118	61	87	349	118	200.5	34	26	8X7	560
SBWG-35-1S		F-25	200	254	8-M16-24	300		127	352	135	72	100	367	125	218.5				
SBWG-04-1S		F-25	200	254	8-M16-24	300		153	417.5	147	73	120	413	153	250	34	32	10X8	630
* SBWG-05-1S		F-30	230	298	8-M20-30	350		180	469.5	155	78	141	443	163	260				710
SBWG-55-1S						350		202	516.5	162	80	144	463	183	280				
SBWG-06-1S		F-35	260	356	8-M30-45	415		230	621	200	109	173	552	217	349	44	38	12X8	800
SBWG-07-1S		F-40	300	406	8-M36-55	475		280.5	723	227	116	209	607	252	384				900
SBWG-75-1S	C	F-48	370	483	12-M36-55	560	5	326	860	246	120	220	721	279	485	58	50	16X10	1000
SBWG-08-1S						560		379	968	254	125	245	756	314	520				
SBWG-09-1S	D	F-60	470	603	20-M36-55	700	5	448.5	1107.5	284	138	270	796	354	560	58	50	16X10	1000
SBWG-10-1S						800		513	1291	352	164	330	927	426	691				
SBWG-11-1S						900		616.5	1499.5	394	181	370	969.5	468.5	733.5				
* SBWG-12-1S		F-80	670	813	20-M42-63	1000		711	1751	482	265	415	1140	554	905				
* SBWG-13-1S						1000		809	1944	546	301	515	1190	609	955				

Size and component specification in this catalogue are subject to change without prior notice for quality improvement.
* Mark has been changed and updated.

Feature >>>

- All mounting bases conform to ISO 5210/1 standards.
- All castings are ductile iron, Class 65-45-12 excellent strength and impact resistance.
- Worm gear material is available in two option.
  - Ductile iron,Class 80-55-06
  - Aluminum bronze, B148-C95800
- Worm is 1045 heat treated Carbon steel.
- Removable splined bushing to permit accurate positioning between gear drive and valve stem.
- Options include hand wheels, chain and etc.

Bushing Type

Splines permit accurate alignment of valve stem key.

Global Leader SAMBO SPIRAL BEVEL GEAR ACTUATORS

The World's Highest Quality!

M·O·V OPTION

Worm Gear can be provided with Motor actuator input flanges to accept standard ISO Mounting Base.

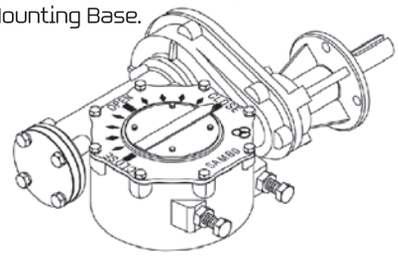

LOCKING DEVICE OPTION

Input can be equipped with a Handwheel locking device for Manually operated units.

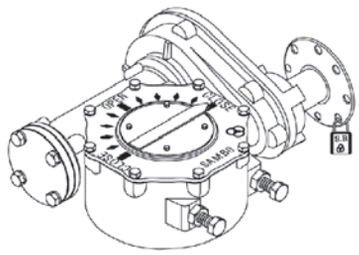

Selection Chart for Manual Operation >>>

SIZE / MODEL	GEAR RATIO	MAX. STEM ACCEPTANCE	BASE MOUNTING OPTION & STANDARD	MAX. TORQUE CAPACITY		WEIGHT
				N–m	Ft . lbf	Kg
SBWG–00–1S	80 : 1	36 (10X8)	F–10 , F–12	1200	885	12
SBWG–01–1S	88 : 1	46 (14X9)	F–10 , F–12 , F–14	2000	1475	15
SBWG–02–1S	121.6 : 1	60 (18X11)	F–12 , F–14 , F–16	2800	2065	25
SBWG–03–1S	131.7 : 1	75 (20X12)	F–14 , F–16 , (F–20)	4300	3172	33
SBWG–35–1S	131.7 : 1	80 (22X14)	F–16 , (F–20) , F–25	6100	4499	50
SBWG–04–1S	168 : 1	95 (25X14)	F–16 , (F–20) , F–25	10400	7671	66
* SBWG–05–1S	180 : 1	115 (32X18)	(F–20), F–25 , F–30	15900	11727	88
SBWG–55–1S	186 : 1	125 (32X18)	F–25 , F–30	23500	17333	107
SBWG–06–1S	256 : 1	140 (36X20)	F–25 , F–30 , F–35	32800	24192	175
SBWG–07–1S	272 : 1	180 (45X25)	F–30 , F–35 , F–40	51100	37689	271
SBWG–75–1S	330 : 1	210 (50X28)	F–35 , F–40 , F–48	81500	60111	422
SBWG–08–1S	330 : 1	250 (56X32)	F–40 , F–48	121000	89245	545
SBWG–09–1S	330 : 1	280 (63X32)	F–48 , F–60	192500	141981	902
SBWG–10–1S	320 : 1	320 (70X36)	F–60	275000	202830	1426
SBWG–11–1S	340 : 1	360 (80X40)	F–60	442000	326002	2182
* SBWG–12–1S	350 : 1	400 (90X45)	F–60 , (F–80)	610000	449913	3081
* SBWG–13–1S	360 : 1	420 (100X50)	F–60 , (F–80)	970000	715435	3980

Size and component specification in this catalogue are subject to change without prior notice for quality improvement.
* Mark has been changed and updated.

STANDARD TYPE-A Twin Shaft

Horizontal Input with Single Reduction Gear Attachment

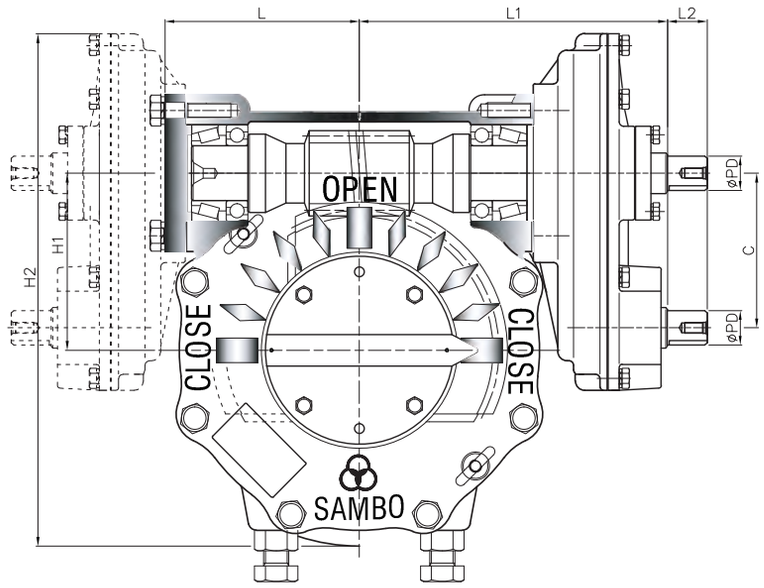

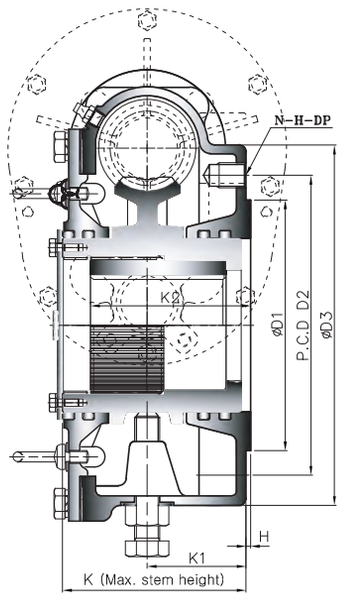

• Pin hole size is same as tap out diameter

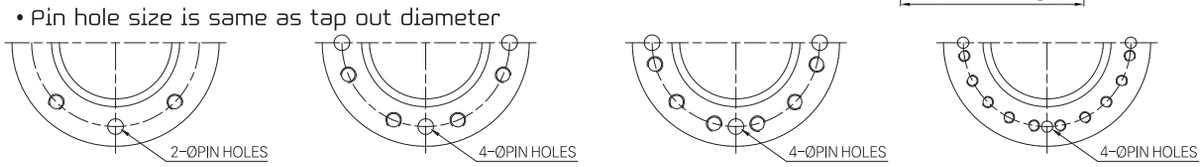

TYPE - A TYPE - B TYPE - C TYPE - D

Dimension >>>

UNIT : mm

MODEL \ DIM	BASE PART							EXTERNAL PART								INPUT SHAFT PART			HAND WHEEL
	TYPE	FLANGE	ØD1	P.C.D ØD2	P.C.D N-H-DP	ØD3	H	H1	H2	K	K1	K2	C	L	L1	L2	ØPD	KEY	
SBWG-00-1ST	A	F-12	85	125	4-M12-18	165	2	69.5	210	86.5	43	53.6	55.9	86	183	29	21	6X6	300
SBWG-01-1ST		F-14	100	140	4-M16-24	190		82.5	235.5	96	53	65		95	192				400
SBWG-02-1ST		F-16	130	165	4-M20-30	220		97	282	111.5	58	75.5	68.6	108	214.5	34	26	8X7	500
SBWG-03-1ST	B	F-16 (F-20)	160	205	8-M16-24	250	3	112	312	118	61	87	68.6	118	224.5	34	26	8X7	560
SBWG-35-1ST		F-25	200	254	8-M16-24	300		127	352	135	72	100		125	218.5				
SBWG-04-1ST		F-25	200	254	8-M16-24	300		153	417.5	147	73	120	121.2	153	286	34	32	10X8	630
* SBWG-05-1ST		F-30	230	298	8-M20-30	350		180	469.5	155	78	141		163	296				710
SBWG-55-1ST						350		202	516.5	162	80	144		183	316				
SBWG-06-1ST		F-35	260	356	8-M30-45	415		230	621	200	109	173	169	217	376	44	38	12X8	800
SBWG-07-1ST		F-40	300	406	8-M36-55	475		280.5	723	227	116	209		252	411				900
SBWG-75-1ST	C	F-48	370	483	12-M36-55	560	5	326	860	246	120	220	230	279	531	58	50	16X10	1000
SBWG-08-1ST						560		379	968	254	125	245		314	566				
SBWG-09-1ST	D	F-60	470	603	20-M36-55	700	5	448.5	1107.5	284	138	270	230	354	606	58	50	16X10	1000
SBWG-10-1ST						800		513	1291	352	164	330	284.3	426	746				
SBWG-11-1ST						900		616.5	1499.5	394	181	370		468.5	788.5				
* SBWG-12-1ST		F-80	670	813	20-M42-63	1000		711	1751	482	265	415	334	554	969				
* SBWG-13-1ST						1000		809	1944	546	301	515		609	1009				

Size and component specification in this catalogue are subject to change without prior notice for quality improvement.
* Mark has been changed and updated.

Global Leader
SAMBO
SPIRAL BEVEL GEAR ACTUATORS

The World's Highest Quality!

Feature >>>

- All mounting bases conform to ISO 5210/1 standards.
- All castings are ductile iron, Class 65-45-12 excellent strength and impact resistance.
- Worm gear material is available in two option.
  - Ductile iron,Class 80-55-06
  - Aluminum bronze, B148-C95800
- Worm is 1045 heat treated Carbon steel.
- Removable splined bushing to permit accurate positioning between gear drive and valve stem.
- Options include hand wheels, chain and etc.

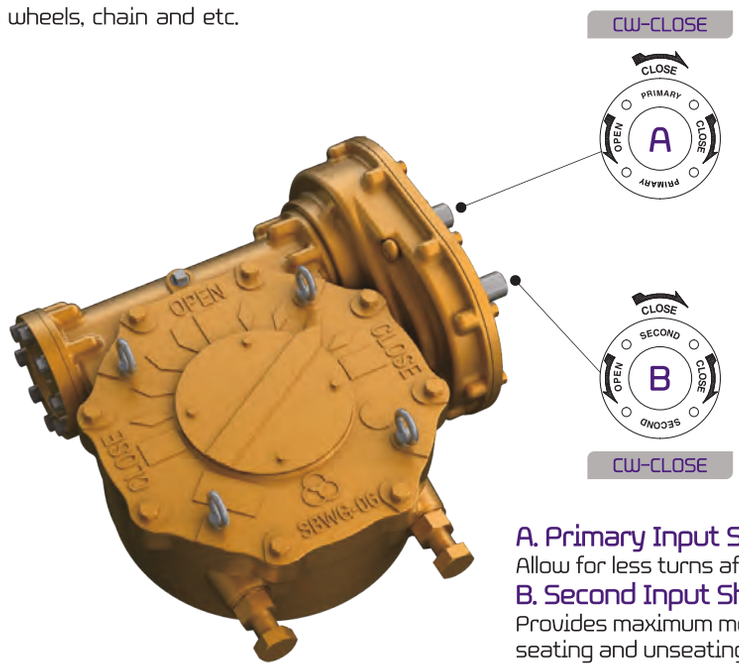

Bushing Type

Splines permit accurate alignment of valve stem key.

A. Primary Input Shaft (High Speed Input Shaft)
Allow for less turns after valve has been unseating.

B. Second Input Shaft (Low Speed Input Shaft)
Provides maximum mechanical advantage for seating and unseating of valves.

Selection Chart for Manual Operation >>>

SIZE / MODEL	GEAR RATIO		MAX. STEM ACCEPTANCE	BASE MOUNTING OPTION & STANDARD	MAX. TORQUE CAPACITY		WEIGHT
	PRIMARY	SECOND			N–m	Ft . lbf	Kg
SBWG–00–1ST	40 : 1	80 : 1	36 (10X8)	F–10 , F–12	1200	885	12
SBWG–01–1ST	44 : 1	88 : 1	46 (14X9)	F–10 , F–12 , F–14	2000	1475	15
SBWG–02–1ST	48 : 1	121.6 : 1	60 (18X11)	F–12 , F–14 , F–16	2800	2065	25
SBWG–03–1ST	52 : 1	131.7 : 1	75 (20X12)	F–14 , F–16 , (F–20)	4300	3172	33
SBWG–35–1ST	52 : 1	131.7 : 1	80 (22X14)	F–16 , (F–20) , F–25	6100	4499	50
SBWG–04–1ST	56 : 1	168 : 1	95 (25X14)	F–16 , (F–20) , F–25	10400	7671	66
* SBWG–05–1ST	60 : 1	180 : 1	115 (32X18)	(F–20), F–25 , F–30	15900	11727	88
SBWG–55–1ST	62 : 1	186 : 1	125 (32X18)	F–25 , F–30	23500	17333	107
SBWG–06–1ST	64 : 1	256 : 1	140 (36X20)	F–25 , F–30 , F–35	32800	24192	175
SBWG–07–1ST	68 : 1	272 : 1	180 (45X25)	F–30 , F–35 , F–40	51100	37689	271
SBWG–75–1ST	66 : 1	330 : 1	210 (50X28)	F–35 , F–40 , F–48	81500	60111	422
SBWG–08–1ST	66 : 1	330 : 1	250 (56X32)	F–40 , F–48	121000	89245	545
SBWG–09–1ST	66 : 1	330 : 1	280 (63X32)	F–48 , F–60	192500	141981	902
SBWG–10–1ST	64 : 1	320 : 1	320 (70X36)	F–60	275000	202830	1426
SBWG–11–1ST	68 : 1	340 : 1	360 (80X40)	F–60	442000	326002	2182
* SBWG–12–1ST	70 : 1	350 : 1	400 (90X45)	F–60 , (F–80)	610000	449913	3081
* SBWG–13–1ST	72 : 1	360 : 1	420 (100X50)	F–60 , (F–80)	970000	715435	3980

Size and component specification in this catalogue are subject to change without prior notice for quality improvement.
* Mark has been changed and updated.

STANDARD TYPE-A

Horizontal Input with Double Reduction Gear Attachment

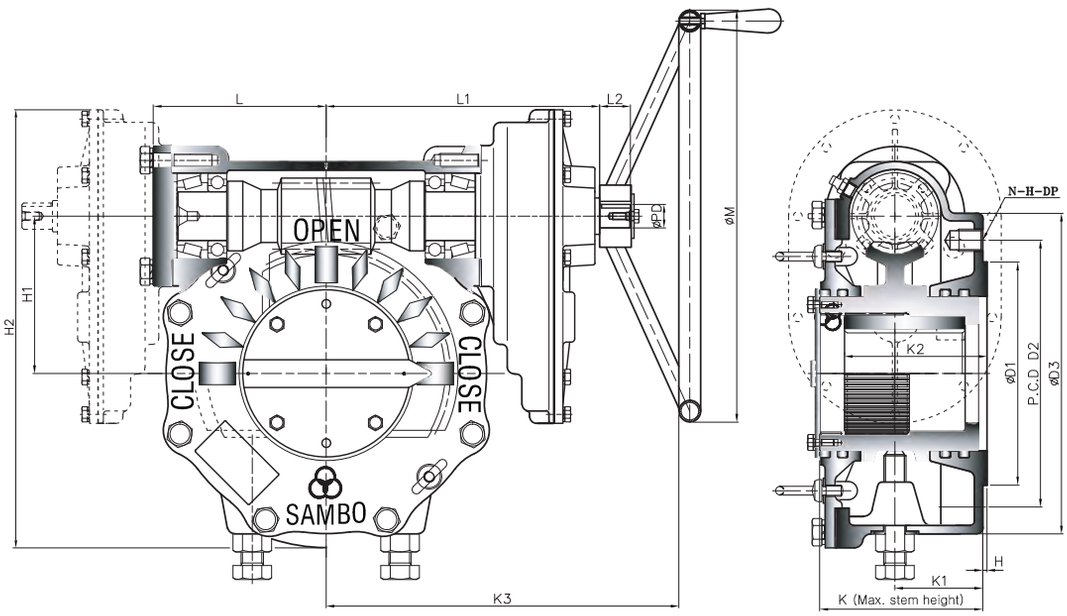

• Pin hole size is same as tap out diameter

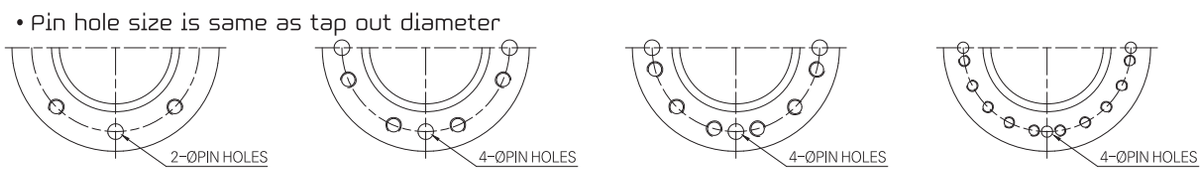

TYPE - A TYPE - B TYPE - C TYPE - D

Dimension >>>

UNIT : mm

MODEL \ DIM	BASE PART							EXTERNAL PART								INPUT SHAFT PART			HAND WHEEL
	TYPE	FLANGE	ØD1	P.C.D ØD2	P.C.D N-H-DP	ØD3	H	H1	H2	K	K1	K2	K3	L	L1	L2	ØPD	KEY	
SBWG-00-1SD	A	F-12	85	125	4-M12-18	165	2	69.5	210	86.5	43	53.6	276	86	183	29	21	6X6	300
SBWG-01-1SD		F-14	100	140	4-M16-24	190		82.5	235.5	96	53	65	305	95	192				400
SBWG-02-1SD		F-16	130	165	4-M20-30	220		97	282	111.5	58	75.5	343	108	214.5	34	26	8X7	500
SBWG-03-1SD	B	F-16 (F-20)	160	205	8-M16-24	250	3	112	312	118	61	87	373	118	224.5	34	26	8X7	560
SBWG-35-1SD		F-25	200	254	8-M16-24	300		127	352	135	72	100	385	125	236.5				
SBWG-04-1SD		F-25	200	254	8-M16-24	300		153	417.5	147	73	120	449	153	286	34	32	10X8	630
* SBWG-05-1SD		F-30	230	298	8-M20-30	350		180	469.5	155	78	141	479	163	296				710
SBWG-55-1SD						350		202	516.5	162	80	144	499	183	316				
SBWG-06-1SD		F-35	260	356	8-M30-45	415		230	621	200	109	173	579	217	376	44	38	12X8	800
SBWG-07-1SD		F-40	300	406	8-M36-55	475		280.5	723	227	116	209	634	252	411				900
SBWG-75-1SD	C	F-48	370	483	12-M36-55	560	5	326	860	246	120	220	767	279	531	58	50	16X10	1000
SBWG-08-1SD						560		379	968	254	125	245	802	314	566				
SBWG-09-1SD	D	F-60	470	603	20-M36-55	700	5	448.5	1107.5	284	138	270	842	354	606	58	50	16X10	1000
SBWG-10-1SD						800		513	1291	352	164	330	982	426	746				
SBWG-11-1SD						900		616.5	1499.5	394	181	370	1039.5	468.5	788.5				
* SBWG-12-1SD		F-80	670	813	20-M42-63	1000		711	1751	482	265	415	1205	554	969				
* SBWG-13-1SD						1000		809	1944	546	301	515	1245	609	1009				

Size and component specification in this catalogue are subject to change without prior notice for quality improvement.
* Mark has been changed and updated.

Feature >>>

- All mounting bases conform to ISO 5210/1 standards.
- All castings are ductile iron, Class 65-45-12 excellent strength and impact resistance.
- Worm gear material is available in two option.
  - Ductile iron,Class 80-55-06
  - Aluminum bronze, B148-C95800
- Worm is 1045 heat treated Carbon steel.
- Removable splined bushing to permit accurate positioning between gear drive and valve stem.
- Options include hand wheels, chain and etc.

Bushing Type

Splines permit accurate alignment of valve stem key.

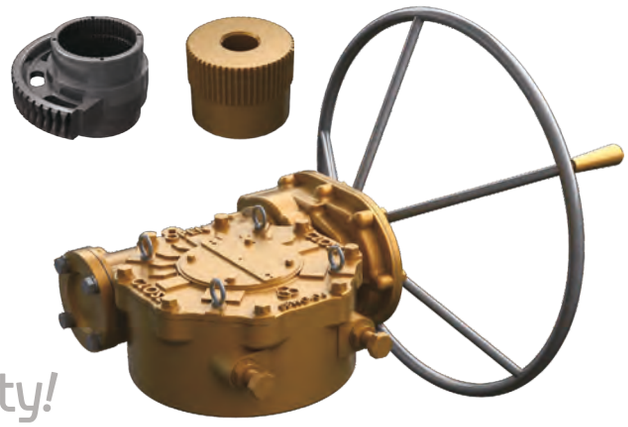

Global Leader SAMBO SPIRAL BEVEL GEAR ACTUATORS

The World's Highest Quality!

M·O·V OPTION

Worm Gear can be provided with Motor actuator input flanges to accept standard ISO Mounting Base.

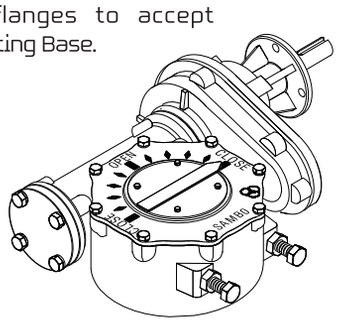

LOCKING DEVICE OPTION

Input can be equipped with a Handwheel locking device for Manually operated units.

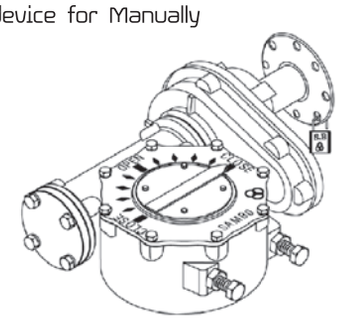

Selection Chart for Manual Operation >>>

SIZE / MODEL	MAX.GEAR RATIO (Changeable)	MAX. STEM ACCEPTANCE	BASE MOUNTING OPTION & STANDARD	MAX. TORQUE CAPACITY		WEIGHT
				N–m	Ft . lbf	Kg
SBWG–00–1SD	160 : 1	36 (10X8)	F–10 , F–12	1200	885	14
SBWG–01–1SD	176 : 1	46 (14X9)	F–10 , F–12 , F–14	2000	1475	17
SBWG–02–1SD	308 : 1	60 (18X11)	F–12 , F–14 , F–16	2800	2065	27
SBWG–03–1SD	333.7 : 1	75 (20X12)	F–14 , F–16 , (F–20)	4300	3172	35
SBWG–35–1SD	333.7 : 1	80 (22X14)	F–16 , (F–20) , F–25	6100	4499	52
SBWG–04–1SD	504 : 1	95 (25X14)	F–16 , (F–20) , F–25	10400	7671	71
* SBWG–05–1SD	540 : 1	115 (32X18)	(F–20), F–25 , F–30	15900	11727	93
SBWG–55–1SD	558 : 1	125 (32X18)	F–25 , F–30	23500	17333	112
SBWG–06–1SD	1024 : 1	140 (36X20)	F–25 , F–30 , F–35	32800	24192	188
SBWG–07–1SD	1088 : 1	180 (45X25)	F–30 , F–35 , F–40	51100	37689	284
SBWG–75–1SD	1650 : 1	210 (50X28)	F–35 , F–40 , F–48	81500	60111	450
SBWG–08–1SD	1650 : 1	250 (56X32)	F–40 , F–48	121000	89245	573
SBWG–09–1SD	1650 : 1	280 (63X32)	F–48 , F–60	192500	141981	930
SBWG–10–1SD	1600 : 1	320 (70X36)	F–60	275000	202830	1464
SBWG–11–1SD	1700 : 1	360 (80X40)	F–60	442000	326002	2220
* SBWG–12–1SD	1750 : 1	400 (90X45)	F–60 , (F–80)	610000	449913	3081
* SBWG–13–1SD	1800 : 1	420 (100X50)	F–60 , (F–80)	970000	715435	3980

Size and component specification in this catalogue are subject to change without prior notice for quality improvement.
* Mark has been changed and updated.

STANDARD TYPE-A Twin Shaft

Horizontal Input with Double Reduction Gear Attachment

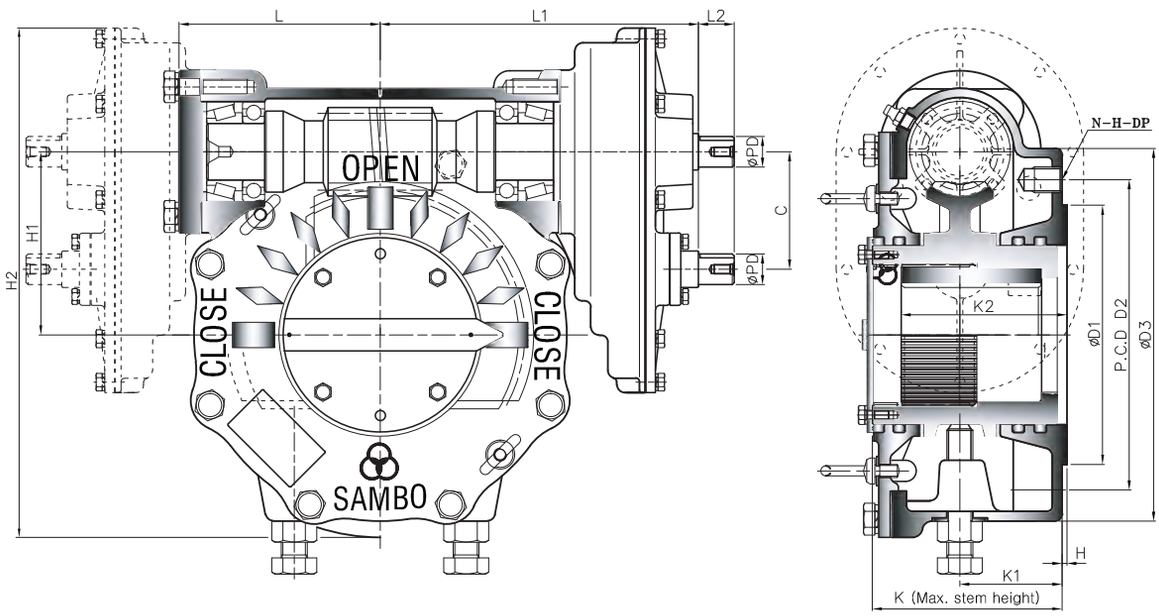

• Pin hole size is same as tap out diameter

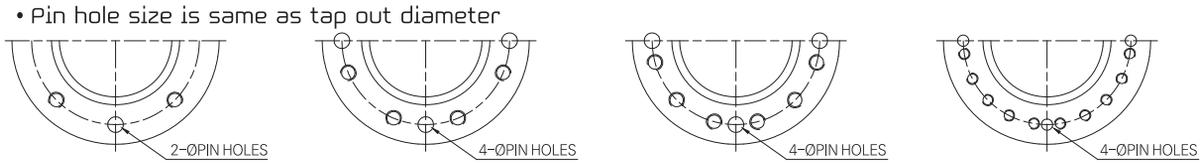

TYPE - A TYPE - B TYPE - C TYPE - D

Dimension >>>

UNIT : mm

MODEL \ DIM	BASE PART							EXTERNAL PART								INPUT SHAFT PART			HAND WHEEL
	TYPE	FLANGE	ØD1	P.C.D ØD2	P.C.D N-H-DP	ØD3	H	H1	H2	K	K1	K2	C	L	L1	L2	ØPD	KEY	
SBWG-00-1SDT	A	F-12	85	125	4-M12-18	165	2	69.5	210	86.5	43	53.6	55.9	86	183	29	21	6X6	300
SBWG-01-1SDT		F-14	100	140	4-M16-24	190		82.5	235.5	96	53	65		95	192				400
SBWG-02-1SDT		F-16	130	165	4-M20-30	220		97	282	111.5	58	75.5	68.6	108	214.5	34	26	8X7	500
SBWG-03-1SDT	B	F-16 (F-20)	160	205	8-M16-24	250	3	112	312	118	61	87	68.6	118	224.5	34	26	8X7	560
SBWG-35-1SDT		F-25	200	254	8-M16-24	300		127	352	135	72	100		125	236.5				
SBWG-04-1SDT		F-25	200	254	8-M16-24	300		153	417.5	147	73	120	93.2	153	286	34	32	10X8	630
*SBWG-05-1SDT		F-30	230	298	8-M20-30	350		180	469.5	155	78	141		163	296				710
SBWG-55-1SDT						350		202	516.5	162	80	144		183	316				
SBWG-06-1SDT		F-35	260	356	8-M30-45	415		230	621	200	109	173	145	217	376	44	38	12X8	800
SBWG-07-1SDT		F-40	300	406	8-M36-55	475		280.5	723	227	116	209		252	411				900
SBWG-75-1SDT	C	F-48	370	483	12-M36-55	560	5	326	860	246	120	220	186.4	279	531	58	50	16X10	1000
SBWG-08-1SDT						560		379	968	254	125	245		314	566				
SBWG-09-1SDT	D	F-60	470	603	20-M36-55	700	5	448.5	1107.5	284	138	270	186.4	354	606	58	50	16X10	1000
SBWG-10-1SDT						800		513	1291	352	164	330	237.6	426	746				
SBWG-11-1SDT						900		616.5	1499.5	394	181	370		468.5	788.5				
*SBWG-12-1SDT		F-80	670	813	20-M42-63	1000		711	1751	482	265	415	298.5	554	969				
*SBWG-13-1SDT						1000		809	1944	546	301	515		609	1009				

Size and component specification in this catalogue are subject to change without prior notice for quality improvement.
* Mark has been changed and updated.

Global Leader
SAMBO
SPIRAL BEVEL GEAR ACTUATORS

The World's Highest Quality!

Feature >>>

- All mounting bases conform to ISO 5210/1 standards.
- All castings are ductile iron, Class 65-45-12 excellent strength and impact resistance.
- Worm gear material is available in two option.
  - Ductile iron,Class 80-55-06
  - Aluminum bronze, B148-C95800
- Worm is 1045 heat treated Carbon steel.
- Removable splined bushing to permit accurate positioning between gear drive and valve stem.
- Options include hand wheels, chain and etc.

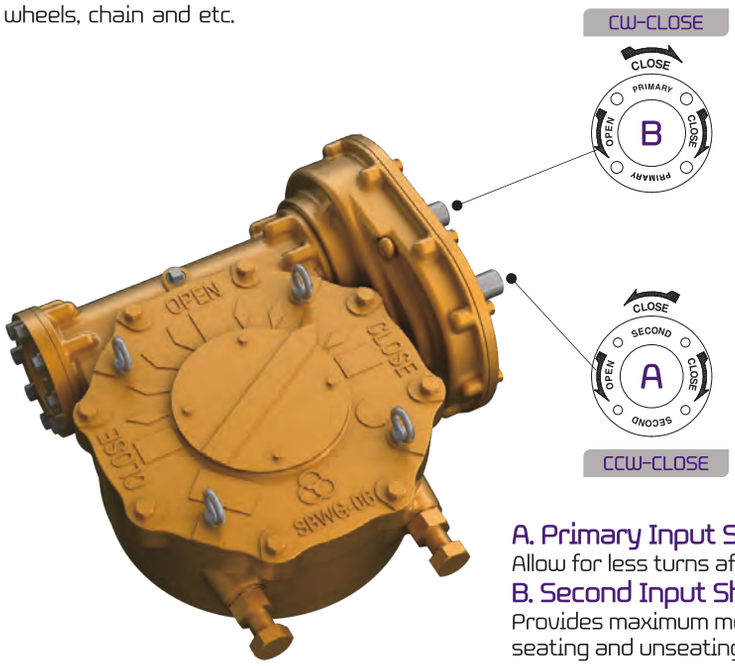

Bushing Type

Splines permit accurate alignment of valve stem key.

A. Primary Input Shaft (High Speed Input Shaft)

Allow for less turns after valve has been unseating.

B. Second Input Shaft (Low Speed Input Shaft)

Provides maximum mechanical advantage for seating and unseating of valves.

Selection Chart for Manual Operation >>>

SIZE / MODEL	GEAR RATIO		MAX. STEM ACCEPTANCE	BASE MOUNTING OPTION & STANDARD	MAX. TORQUE CAPACITY		WEIGHT
	PRIMARY	SECOND			N–m	Ft . lbf	Kg
SBWG–00–1SDT	80 : 1	160 : 1	36 (10X8)	F–10 , F–12	1200	885	14
SBWG–01–1SDT	88 : 1	176 : 1	46 (14X9)	F–10 , F–12 , F–14	2000	1475	17
SBWG–02–1SDT	121.6 : 1	308 : 1	60 (18X11)	F–12 , F–14 , F–16	2800	2065	27
SBWG–03–1SDT	131.7 : 1	333.7 : 1	75 (20X12)	F–14 , F–16 , (F–20)	4300	3172	35
SBWG–35–1SDT	131.7 : 1	333.7 : 1	80 (22X14)	F–16 , (F–20) , F–25	6100	4499	52
SBWG–04–1SDT	168 : 1	504 : 1	95 (25X14)	F–16 , (F–20) , F–25	10400	7671	71
*SBWG–05–1SDT	180 : 1	540 : 1	115 (32X18)	(F–20), F–25 , F–30	15900	11727	93
SBWG–55–1SDT	186 : 1	558 : 1	125 (32X18)	F–25 , F–30	23500	17333	112
SBWG–06–1SDT	256 : 1	1024 : 1	140 (36X20)	F–25 , F–30 , F–35	32800	24192	188
SBWG–07–1SDT	272 : 1	1088 : 1	180 (45X25)	F–30 , F–35 , F–40	51100	37689	284
SBWG–75–1SDT	330 : 1	1650 : 1	210 (50X28)	F–35 , F–40 , F–48	81500	60111	450
SBWG–08–1SDT	330 : 1	1650 : 1	250 (56X32)	F–40 , F–48	121000	89245	573
SBWG–09–1SDT	330 : 1	1650 : 1	280 (63X32)	F–48 , F–60	192500	141981	930
SBWG–10–1SDT	320 : 1	1600 : 1	320 (70X36)	F–60	275000	202830	1464
SBWG–11–1SDT	340 : 1	1700 : 1	360 (80X40)	F–60	442000	326002	2220
*SBWG–12–1SDT	350 : 1	1750 : 1	400 (90X45)	F–60 , (F–80)	610000	449913	3081
*SBWG–13–1SDT	360 : 1	1800 : 1	420 (100X50)	F–60 , (F–80)	970000	715435	3980

Size and component specification in this catalogue are subject to change without prior notice for quality improvement.
* Mark has been changed and updated.

STANDARD TYPE-A

Horizontal Input with Triple Reduction Gear Attachment

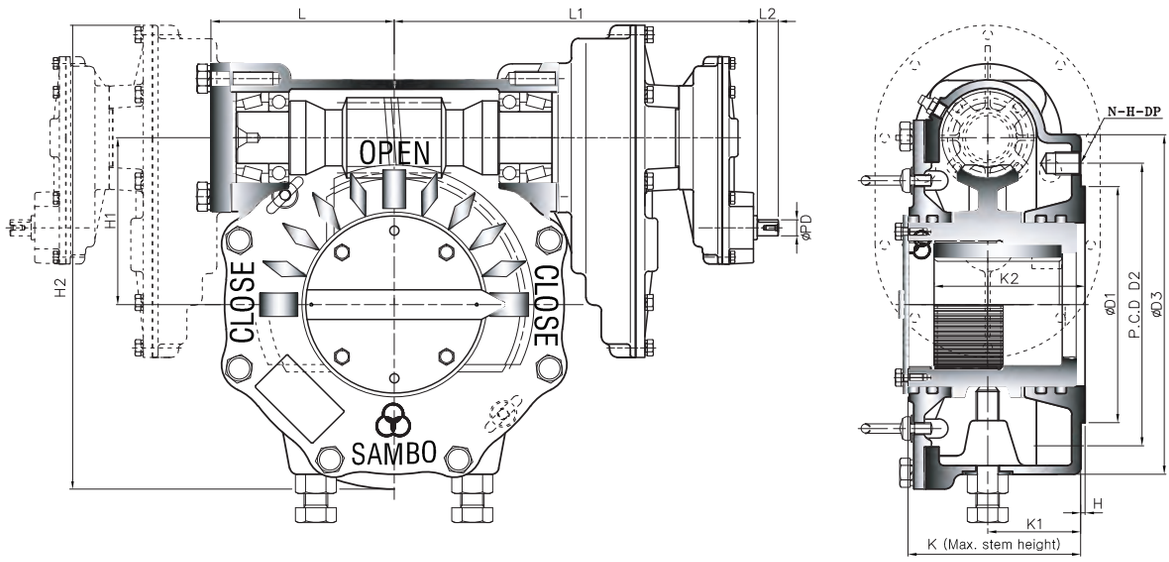

• Pin hole size is same as tap out diameter

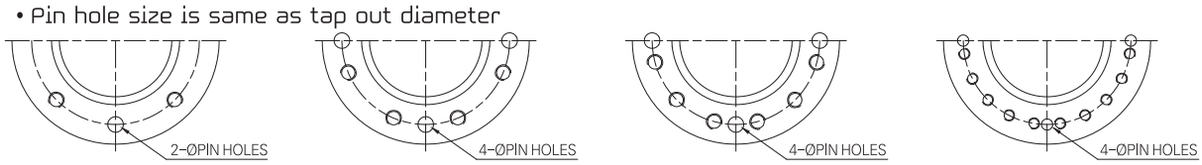

TYPE - A TYPE - B TYPE - C TYPE - D

Dimension >>>

UNIT : mm

MODEL \ DIM	BASE PART							EXTERNAL PART							INPUT SHAFT PART			HAND WHEEL
	TYPE	FLANGE	ØD1	P.C.D ØD2	P.C.D N-H-DP	ØD3	H	H1	H2	K	K1	K2	L	L1	L2	ØPD	KEY	
SBWG-00-2SD	A	F-12	85	125	4-M12-18	165	2	69.5	210	86.5	43	53.6	86	261	29	21	6X6	300
SBWG-01-2SD		F-14	100	140	4-M16-24	190		82.5	235.5	96	53	65	95	270				300
SBWG-02-2SD		F-16	130	165	4-M20-30	220		97	282	111.5	58	75.5	108	295.5	29	21	6X6	300
SBWG-03-2SD	B	F-16 (F-20)	160	205	8-M16-24	250	3	112	312	118	61	87	118	305.5	29	21	6X6	400
SBWG-35-2SD		F-25	200	254	8-M16-24	300		127	352	135	72	100	125	317.5				
SBWG-04-2SD		F-25	200	254	8-M16-24	300		153	417.5	147	73	120	153	364.5	34	26	8X7	500
*SBWG-05-2SD		F-30	230	298	8-M20-30	350		180	469.5	155	78	141	163	374.5				560
SBWG-55-2SD						350		202	516.5	162	80	144	183	394.5				
SBWG-06-2SD		F-35	260	356	8-M30-45	415		230	621	200	109	173	217	471	34	32	10X8	630
SBWG-07-2SD		F-40	300	406	8-M36-55	475		280.5	723	227	116	209	252	506				710
SBWG-75-2SD	C	F-48	370	483	12-M36-55	560	5	326	860	246	120	220	279	662	44	38	12X8	800
SBWG-08-2SD						560		379	968	254	125	245	314	697				900
SBWG-09-2SD	D	F-60	470	603	20-M36-55	700	5	448.5	1107.5	284	138	270	354	737	44	38	12X8	900
SBWG-10-2SD						800		513	1291	352	164	330	426	959	58	50	16X10	1000
SBWG-11-2SD						900		616.5	1499.5	394	181	370	468.5	1001.5				
*SBWG-12-2SD		F-80	670	813	20-M42-63	1000		711	1751	482	265	415	554	1255				
*SBWG-13-2SD						1000		809	1944	546	301	515	609	1295				

Size and component specification in this catalogue are subject to change without prior notice for quality improvement.
* Mark has been changed and updated.

Feature >>>

- All mounting bases conform to ISO 5210/1 standards.
- All castings are ductile iron, Class 65-45-12 excellent strength and impact resistance.
- Worm gear material is available in two option.
  - Ductile iron,Class 80-55-06
  - Aluminum bronze, B148-C95800
- Worm is 1045 heat treated Carbon steel.
- Removable splined bushing to permit accurate positioning between gear drive and valve stem.
- Options include hand wheels, chain and etc.

Bushing Type

Splines permit accurate alignment of valve stem key.

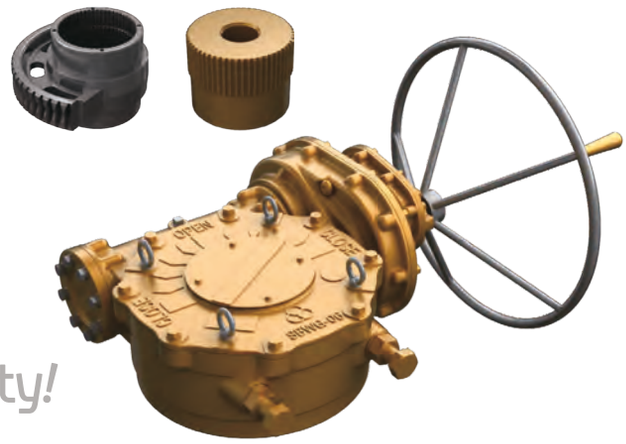

Global Leader SAMBO SPIRAL BEVEL GEAR ACTUATORS

The World's Highest Quality!

M·O·V OPTION

Worm Gear can be provided with Motor actuator input flanges to accept standard ISO Mounting Base.

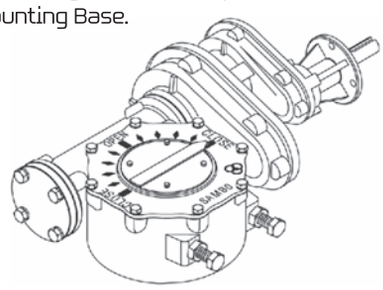

LOCKING DEVICE OPTION

Input can be equipped with a Handwheel locking device for Manually operated units.

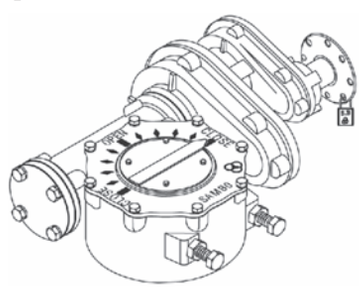

Selection Chart for Manual Operation >>>

SIZE / MODEL	GEAR RATIO (Changeable)	MAX. STEM ACCEPTANCE	BASE MOUNTING OPTION & STANDARD	MAX. TORQUE CAPACITY		WEIGHT
				N–m	Ft . lbf	Kg
SBWG–00–2SD	320 : 1	36 (10X8)	F–10 , F–12	1200	885	16
SBWG–01–2SD	352 : 1	46 (14X9)	F–10 , F–12 , F–14	2000	1475	19
SBWG–02–2SD	616 : 1	60 (18X11)	F–12 , F–14 , F–16	2800	2065	29
SBWG–03–2SD	667.4 : 1	75 (20X12)	F–14 , F–16 , (F–20)	4300	3172	38
SBWG–35–2SD	667.4 : 1	80 (22X14)	F–16 , (F–20) , F–25	6100	4499	60
SBWG–04–2SD	1275 : 1	95 (25X14)	F–16 , (F–20) , F–25	10400	7671	75
*SBWG–05–2SD	1368 : 1	115 (32X18)	(F–20), F–25 , F–30	15900	11727	97
SBWG–55–2SD	1413.6 : 1	125 (32X18)	F–25 , F–30	23500	17333	116
SBWG–06–2SD	3072 : 1	140 (36X20)	F–25 , F–30 , F–35	32800	24192	198
SBWG–07–2SD	3264 : 1	180 (45X25)	F–30 , F–35 , F–40	51100	37689	294
SBWG–75–2SD	6600 : 1	210 (50X28)	F–35 , F–40 , F–48	81500	60111	478
SBWG–08–2SD	6600 : 1	250 (56X32)	F–40 , F–48	121000	89245	601
SBWG–09–2SD	6600 : 1	280 (63X32)	F–48 , F–60	192500	141981	957
SBWG–10–2SD	8000 : 1	320 (70X36)	F–60	275000	202830	1536
SBWG–11–2SD	8500 : 1	360 (80X40)	F–60	442000	326002	2292
*SBWG–12–2SD	8750 : 1	400 (90X45)	F–60 , (F–80)	610000	449913	3178
*SBWG–13–2SD	9000 : 1	420 (100X50)	F–60 , (F–80)	970000	715435	4077

Size and component specification in this catalogue are subject to change without prior notice for quality improvement.
* Mark has been changed and updated.

STANDARD TYPE-B

Vertical Input with Double Reduction Gear Attachment

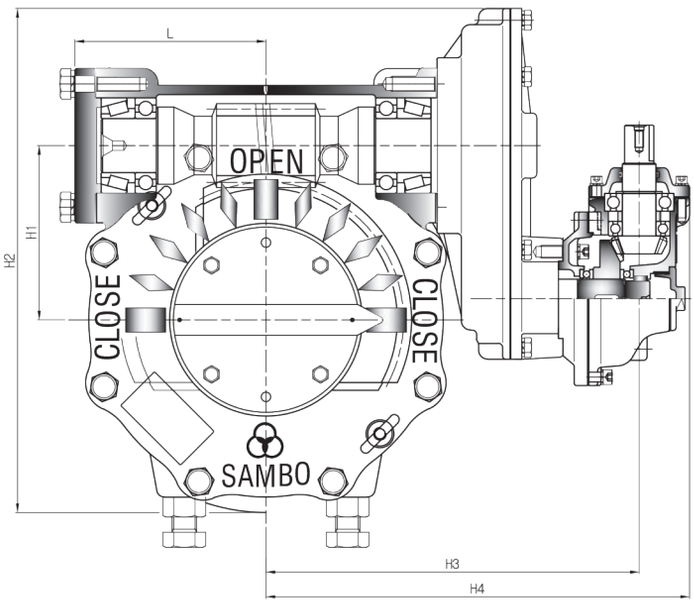

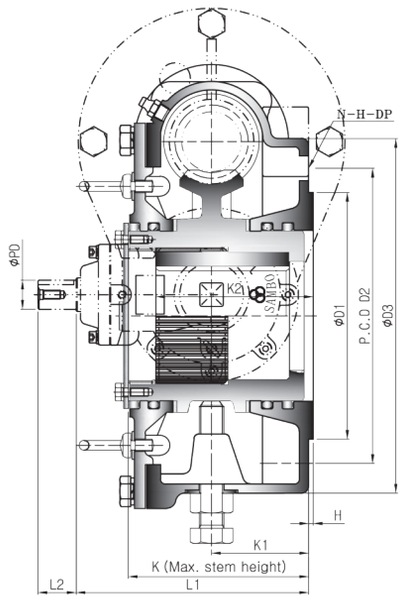

• Pin hole size is same as tap out diameter

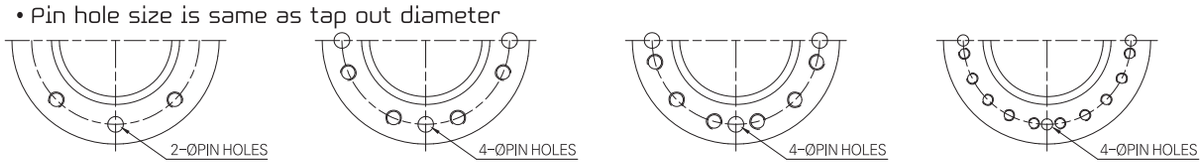

TYPE - A TYPE - B TYPE - C TYPE - D

Dimension >>>

UNIT : mm

MODEL \ DIM	BASE PART							EXTERNAL PART									INPUT SHAFT PART			HAND WHEEL
	TYPE	FLANGE	ØD1	P.C.D ØD2	P.C.D N-H-DP	ØD3	H	H1	H2	H3	H4	K	K1	K2	L	L1	L2	ØPD	KEY	
SBWG-00-1S2B	A	F-12	85	125	4-M12-18	165	2	69.5	210	204	244	86.5	43	53.6	86	132	34	26	8X7	250
SBWG-01-1S2B		F-14	100	140	4-M16-24	190		82.5	235.5	213	253	96	53	65	95	142				
SBWG-02-1S2B		F-16	130	165	4-M20-30	220		97	282	231.5	271.5	111.5	58	75.5	108	145	34	26	8X7	250
SBWG-03-1S2B	B	F-16 (F-20)	160	205	8-M16-24	250	3	112	312	241.5	281.5	118	61	87	118	148	34	26	8X7	250
SBWG-35-1S2B		F-25	200	254	8-M16-24	300		127	352	259.5	299.5	135	72	100	125	161				
SBWG-04-1S2B		F-25	200	254	8-M16-24	300		153	417.5	308	358	147	73	120	153	194	34	26	8X7	300
*SBWG-05-1S2B		F-30	230	298	8-M20-30	350		180	469.5	318	368	155	78	141	163	199				
SBWG-55-1S2B						350		202	516.5	338	388	162	80	144	183	201				
SBWG-06-1S2B		F-35	260	356	8-M30-45	415		230	621	411.5	461.5	200	109	173	217	240	34	26	8X7	400
SBWG-07-1S2B		F-40	300	406	8-M36-55	475		280.5	723	446.5	496.5	227	116	209	252	246				500
SBWG-75-1S2B	C	F-48	370	483	12-M36-55	560	5	326	860	558.5	623	246	120	220	279	308	34	32	10X8	630
SBWG-08-1S2B						560		379	968	593	658	254	125	245	314	313				
SBWG-09-1S2B	D	F-60	470	603	20-M36-55	700	5	448.5	1107.5	633	698	284	138	270	354	326	34	32	10X8	630
SBWG-10-1S2B						800		513	1291	839	904	352	164	330	426	384.5	34	32	10X8	710
SBWG-11-1S2B						900		616.5	1499.5	881.5	946.5	394	181	370	468.5	401.5				
*SBWG-12-1S2B		F-80	670	813	20-M42-63	1000		711	1751	1070	1153	482	265	415	554	536	44	38	12X8	800
*SBWG-13-1S2B						1000		809	1944	1132	1203	546	301	515	609	592				900

Size and component specification in this catalogue are subject to change without prior notice for quality improvement.
* Mark has been changed and updated.

Feature >>>

- All mounting bases conform to ISO 5210/1 standards.
- All castings are ductile iron, Class 65-45-12 excellent strength and impact resistance.
- Worm gear material is available in two option.
  - Ductile iron,Class 80-55-06
  - Aluminum bronze, B148-C95800
- Worm is 1045 heat treated Carbon steel.
- Removable splined bushing to permit accurate positioning between gear drive and valve stem.
- Options include hand wheels, chain and etc.

Bushing Type

Splines permit accurate alignment of valve stem key.

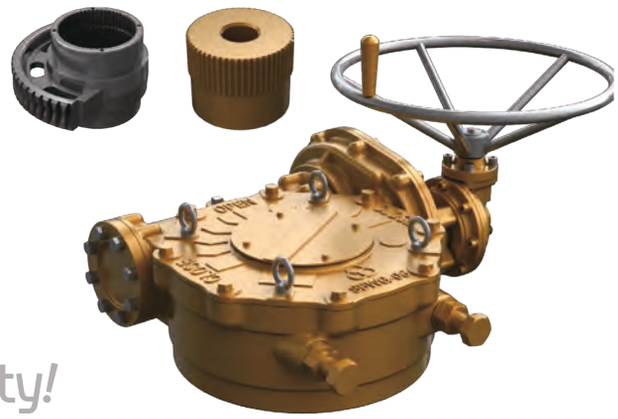

Global Leader SAMBO SPIRAL BEVEL GEAR ACTUATORS

The World's Highest Quality!

M·O·V OPTION

Worm Gear can be provided with Motor actuator input flanges to accept standard ISO Mounting Base.

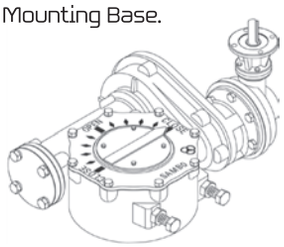

SQUARE NUT OPTION

Input can be equipped with a Handwheel locking device for Manually operated units.

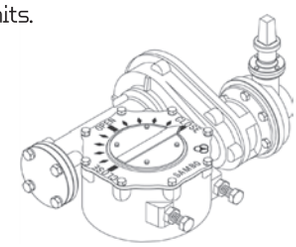

Selection Chart for Manual Operation >>>

SIZE / MODEL	GEAR RATIO	MAX. STEM ACCEPTANCE	BASE MOUNTING OPTION & STANDARD	MAX. TORQUE CAPACITY		WEIGHT
				N–m	Ft . lbf	Kg
SBWG–00–1S2B	160 : 1	36 (10X8)	F–10 , F–12	1200	885	17
SBWG–01–1S2B	176 : 1	46 (14X9)	F–10 , F–12 , F–14	2000	1475	20
SBWG–02–1S2B	243.2 : 1	60 (18X11)	F–12 , F–14 , F–16	2800	2065	30
SBWG–03–1S2B	263.5 : 1	75 (20X12)	F–14 , F–16 , (F–20)	4300	3172	38
SBWG–35–1S2B	263.5 : 1	80 (22X14)	F–16 , (F–20) , F–25	6100	4499	55
SBWG–04–1S2B	420 : 1	95 (25X14)	F–16 , (F–20) , F–25	10400	7671	74
*SBWG–05–1S2B	450 : 1	115 (32X18)	(F–20), F–25 , F–30	15900	11727	96
SBWG–55–1S2B	465 : 1	125 (32X18)	F–25 , F–30	23500	17333	115
SBWG–06–1S2B	768 : 1	140 (36X20)	F–25 , F–30 , F–35	32800	24192	185
SBWG–07–1S2B	816 : 1	180 (45X25)	F–30 , F–35 , F–40	51100	37689	281
SBWG–75–1S2B	1320 : 1	210 (50X28)	F–35 , F–40 , F–48	81500	60111	450
SBWG–08–1S2B	1320 : 1	250 (56X32)	F–40 , F–48	121000	89245	573
SBWG–09–1S2B	1320 : 1	280 (63X32)	F–48 , F–60	192500	141981	930
SBWG–10–1S2B	1600 : 1	320 (70X36)	F–60	275000	202830	1470
SBWG–11–1S2B	1700 : 1	360 (80X40)	F–60	442000	326002	2260
*SBWG–12–1S2B	1925 : 1	400 (90X45)	F–60 , (F–80)	610000	449913	3158
*SBWG–13–1S2B	2160 : 1	420 (100X50)	F–60 , (F–80)	970000	715435	4079

Size and component specification in this catalogue are subject to change without prior notice for quality improvement.
* Mark has been changed and updated.

STANDARD TYPE-B

Vertical Input with Triple Reduction Gear Attachment

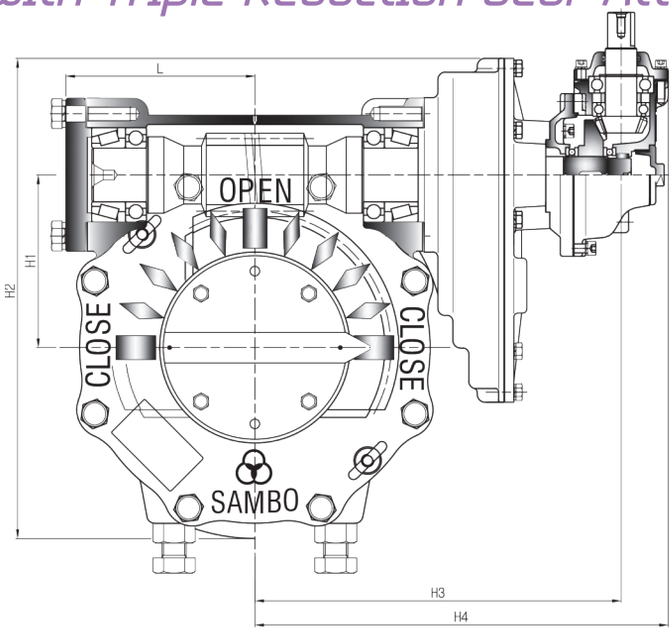

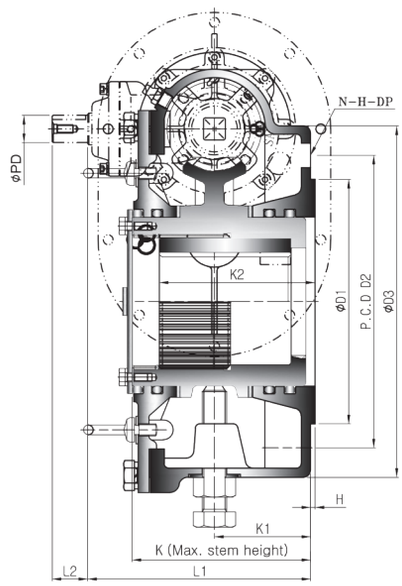

• Pin hole size is same as tap out diameter

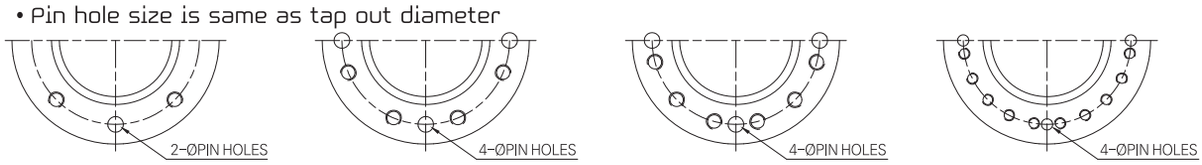

TYPE - A TYPE - B TYPE - C TYPE - D

Dimension >>>

UNIT : mm

MODEL \ DIM	BASE PART							EXTERNAL PART									INPUT SHAFT PART			HAND WHEEL
	TYPE	FLANGE	ØD1	P.C.D ØD2	P.C.D N-H-DP	ØD3	H	H1	H2	H3	H4	K	K1	K2	L	L1	L2	ØPD	KEY	
SBWG-00-1SD2B	A	F-12	85	125	4-M12-18	165	2	69.5	210	221	261	86.5	43	53.6	86	132	34	26	8X7	250
SBWG-01-1SD2B		F-14	100	140	4-M16-24	190		82.5	235.5	230	270	96	53	65	95	142				
SBWG-02-1SD2B		F-16	130	165	4-M20-30	220		97	282	255.5	295.5	111.5	58	75.5	108	145	34	26	8X7	250
SBWG-03-1SD2B	B	F-16 (F-20)	160	205	8-M16-24	250	3	112	312	265.5	305.5	118	61	87	118	148	34	26	8X7	250
SBWG-35-1SD2B		F-25	200	254	8-M16-24	300		127	352	277.5	317.5	135	72	100	125	161				
SBWG-04-1SD2B		F-25	200	254	8-M16-24	300		153	417.5	344	394	147	73	120	153	194	34	26	8X7	300
* SBWG-05-1SD2B		F-30	230	298	8-M20-30	350		180	469.5	354	404	155	78	141	163	199				
SBWG-55-1SD2B						350		202	516.5	374	424	162	80	144	183	201				
SBWG-06-1SD2B		F-35	260	356	8-M30-45	415		230	621	438.5	488.5	200	109	173	217	240	34	26	8X7	400
SBWG-07-1SD2B		F-40	300	406	8-M36-55	475		280.5	723	473.5	523.5	227	116	209	252	246				500
SBWG-75-1SD2B	C	F-48	370	483	12-M36-55	560	5	326	860	618.5	683.5	246	120	220	279	308	34	32	10X8	630
SBWG-08-1SD2B						560		379	968	653.5	718.5	254	125	245	314	313				
SBWG-09-1SD2B	D	F-60	470	603	20-M36-55	700	5	448.5	1107.5	693.5	758.5	284	138	270	354	326	34	32	10X8	630
SBWG-10-1SD2B						800		513	1291	893	958	352	164	330	426	384.5	34	32	10X8	710
SBWG-11-1SD2B						900		616.5	1499.5	935.5	1000.5	394	181	370	468.5	401.5				
* SBWG-12-1SD2B		F-80	670	813	20-M42-63	1000		711	1751	1135	1217.5	482	265	415	554	536	44	38	12X8	800
* SBWG-13-1SD2B						1000		809	1944	1187	1269.5	546	301	515	609	592				900

Size and component specification in this catalogue are subject to change without prior notice for quality improvement.
* Mark has been changed and updated.

Feature >>>

- All mounting bases conform to ISO 5210/1 standards.
- All castings are ductile iron, Class 65-45-12 excellent strength and impact resistance.
- Worm gear material is available in two option.
  - Ductile iron,Class 80-55-06
  - Aluminum bronze, B148-C95800
- Worm is 1045 heat treated Carbon steel.
- Removable splined bushing to permit accurate positioning between gear drive and valve stem.
- Options include hand wheels, chain and etc.

Bushing Type

Splines permit accurate alignment of valve stem key.

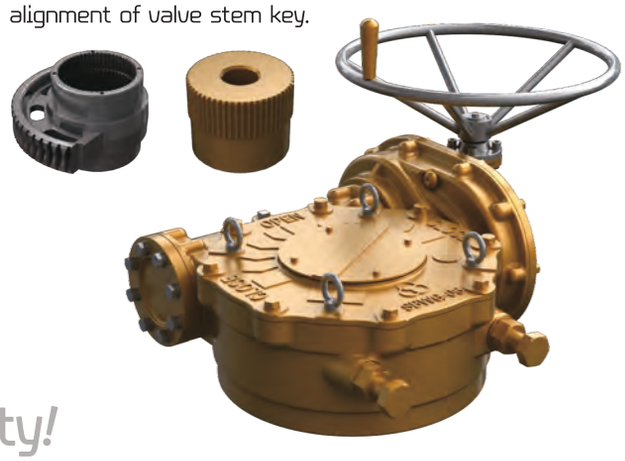

Global Leader SAMBO SPIRAL BEVEL GEAR ACTUATORS

The World's Highest Quality!

M·O·V OPTION

Worm Gear can be provided with Motor actuator input flanges to accept standard ISO Mounting Base.

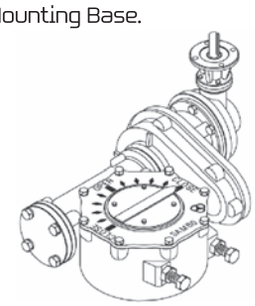

SQUARE NUT OPTION

Input can be equipped with a Handwheel locking device for Manually operated units.

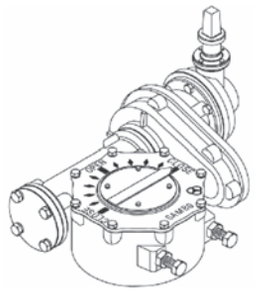

Selection Chart for Manual Operation >>>

SIZE / MODEL	MAX.GEAR RATIO (Change Able)	MAX. STEM ACCEPTANCE	BASE MOUNTING OPTION & STANDARD	MAX. TORQUE CAPACITY		WEIGHT
				N–m	Ft . lbf	Kg
SBWG–00–1SD2B	320 : 1	36 (10X8)	F–10 , F–12	1200	885	19
SBWG–01–1SD2B	352 : 1	46 (14X9)	F–10 , F–12 , F–14	2000	1475	22
SBWG–02–1SD2B	616 : 1	60 (18X11)	F–12 , F–14 , F–16	2800	2065	32
SBWG–03–1SD2B	667 : 1	75 (20X12)	F–14 , F–16 , (F–20)	4300	3172	40
SBWG–35–1SD2B	667 : 1	80 (22X14)	F–16 , (F–20) , F–25	6100	4499	57
SBWG–04–1SD2B	1260 : 1	95 (25X14)	F–16 , (F–20) , F–25	10400	7671	79
* SBWG–05–1SD2B	1350 : 1	115 (32X18)	(F–20), F–25 , F–30	15900	11727	101
SBWG–55–1SD2B	1395 : 1	125 (32X18)	F–25 , F–30	23500	17333	120
SBWG–06–1SD2B	3072 : 1	140 (36X20)	F–25 , F–30 , F–35	32800	24192	198
SBWG–07–1SD2B	3264 : 1	180 (45X25)	F–30 , F–35 , F–40	51100	37689	294
SBWG–75–1SD2B	6600 : 1	210 (50X28)	F–35 , F–40 , F–48	81500	60111	478
SBWG–08–1SD2B	6600 : 1	250 (56X32)	F–40 , F–48	121000	89245	602
SBWG–09–1SD2B	6600 : 1	280 (63X32)	F–48 , F–60	192500	141981	958
SBWG–10–1SD2B	8000 : 1	320 (70X36)	F–60	275000	202830	1508
SBWG–11–1SD2B	8500 : 1	360 (80X40)	F–60	442000	326002	2264
* SBWG–12–1SD2B	9625 : 1	400 (90X45)	F–60 , (F–80)	610000	449913	3158
* SBWG–13–1SD2B	10800 : 1	420 (100X50)	F–60 , (F–80)	970000	715435	4079

Size and component specification in this catalogue are subject to change without prior notice for quality improvement.
* Mark has been changed and updated.

STANDARD TYPE-B

Vertical Input with Single Reduction Gear Attachment

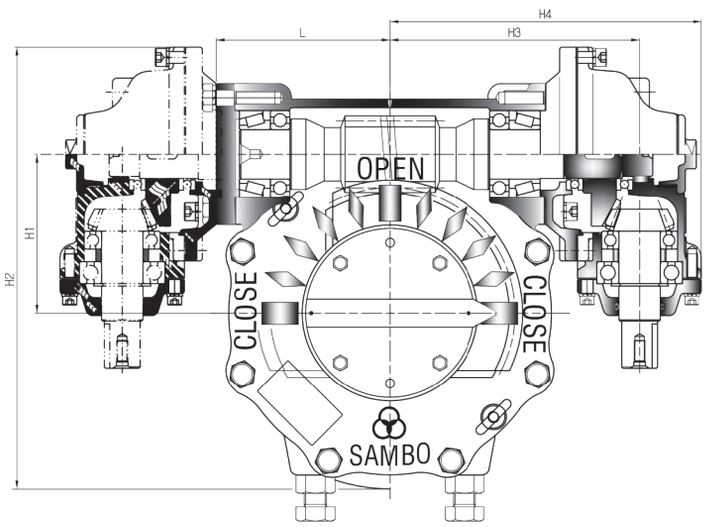

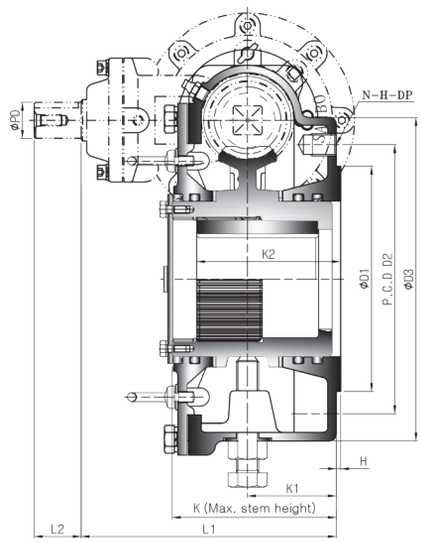

• Pin hole size is same as tap out diameter

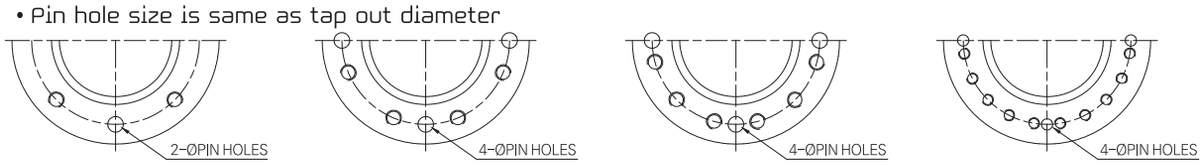

TYPE - A TYPE - B TYPE - C TYPE - D

Dimension >>>

UNIT : mm

MODEL \ DIM	BASE PART							EXTERNAL PART									INPUT SHAFT PART			HAND WHEEL
	TYPE	FLANGE	ØD1	P.C.D ØD2	P.C.D N-H-DP	ØD3	H	H1	H2	H3	H4	K	K1	K2	L	L1	L2	ØPD	KEY	
SBWG-00-2B	A	F-12	85	125	4-M12-18	165	2	69.5	214.5	126	166	86.5	43	53.6	86	132	34	26	8X7	250
SBWG-01-2B		F-14	100	140	4-M16-24	190		82.5	240	135	175	96	53	65	95	142				
SBWG-02-2B		F-16	130	165	4-M20-30	220		97	284.5	164	214	111.5	58	75.5	108	177	34	26	8X7	300
SBWG-03-2B	B	F-16 (F-20)	160	205	8-M16-24	250	3	112	314.5	174	224	118	61	87	118	180	34	26	8X7	300
SBWG-35-2B		F-25	200	254	8-M16-24	300		127	354.5	192	242	135	72	100	125	193				
SBWG-04-2B		F-25	200	254	8-M16-24	300		153	406.5	212.5	262.5	147	73	120	153	204	34	26	8X7	400
* SBWG-05-2B		F-30	230	298	8-M20-30	350		180	458.5	222.5	272.5	155	78	141	163	209				500
SBWG-55-2B						350		202	505.5	242.5	292.5	162	80	144	183	211				
SBWG-06-2B		F-35	260	356	8-M30-45	415		230	598.5	312	377	200	109	173	217	297	34	32	10X8	630
SBWG-07-2B		F-40	300	406	8-M36-55	475		280.5	700.5	347	412	227	116	209	252	303				710
SBWG-75-2B	C	F-48	370	483	12-M36-55	560	5	326	818.5	414	479	246	120	220	279	328	34	32	10X8	710
SBWG-08-2B						560		379	954	498	580.5	254	125	245	314	391	44	38	12X8	800
SBWG-09-2B	D	F-60	470	603	20-M36-55	700	5	448.5	1118.5	550	632.5	284	138	270	354	429	44	38	12X8	900
SBWG-10-2B						800		513	1281	742	824.5	352	164	330	426	477	44	38	12X8	900
SBWG-11-2B						900		616.5	1489.5	784.5	867	394	181	370	468.5	494				
* SBWG-12-2B		F-80	670	813	20-M42-63	1000		711	1711	886	986	482	265	415	554	651	58	50	16X10	1000
* SBWG-13-2B						1000		809	1941.5	947	1047	546	301	515	609	710				

Size and component specification in this catalogue are subject to change without prior notice for quality improvement.
* Mark has been changed and updated.

Feature >>>

- All mounting bases conform to ISO 5210/1 standards.
- All castings are ductile iron, Class 65-45-12 excellent strength and impact resistance.
- Worm gear material is available in two option.
  - Ductile iron,Class 80-55-06
  - Aluminum bronze, B148-C95800
- Worm is 1045 heat treated Carbon steel.
- Removable splined bushing to permit accurate positioning between gear drive and valve stem.
- Options include hand wheels, chain and etc.

Bushing Type

Splines permit accurate alignment of valve stem key.

Global Leader SAMBO SPIRAL BEVEL GEAR ACTUATORS

The World's Highest Quality!

M·O·V OPTION

Worm Gear can be provided with Motor actuator input flanges to accept standard ISO Mounting Base.

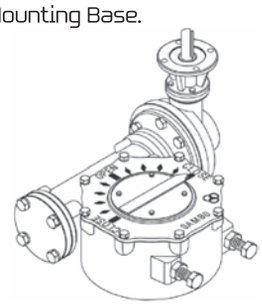

SQUARE NUT OPTION

Input can be equipped with a Handwheel locking device for Manually operated units.

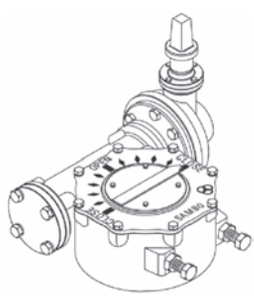

Selection Chart for Manual Operation >>>

SIZE / MODEL	GEAR RATIO	MAX. STEM ACCEPTANCE	BASE MOUNTING OPTION & STANDARD	MAX. TORQUE CAPACITY		WEIGHT
				N–m	Ft . lbf	Kg
SBWG–00–2B	80 : 1	36 (10X8)	F–10 , F–12	1200	885	15
SBWG–01–2B	88 : 1	46 (14X9)	F–10 , F–12 , F–14	2000	1475	18
SBWG–02–2B	120 : 1	60 (18X11)	F–12 , F–14 , F–16	2800	2065	29
SBWG–03–2B	130 : 1	75 (20X12)	F–14 , F–16 , (F–20)	4300	3172	37
SBWG–35–2B	130 : 1	80 (22X14)	F–16 , (F–20) , F–25	6100	4499	48
SBWG–04–2B	168 : 1	95 (25X14)	F–16 , (F–20) , F–25	10400	7671	66
* SBWG–05–2B	180 : 1	115 (32X18)	(F–20), F–25 , F–30	15900	11727	88
SBWG–55–2B	186 : 1	125 (32X18)	F–25 , F–30	23500	17333	107
SBWG–06–2B	256 : 1	140 (36X20)	F–25 , F–30 , F–35	32800	24192	175
SBWG–07–2B	272 : 1	180 (45X25)	F–30 , F–35 , F–40	51100	37689	271
SBWG–75–2B	330 : 1	210 (50X28)	F–35 , F–40 , F–48	81500	60111	390
SBWG–08–2B	363 : 1	250 (56X32)	F–40 , F–48	121000	89245	544
SBWG–09–2B	396 : 1	280 (63X32)	F–48 , F–60	192500	141981	920
SBWG–10–2B	416 : 1	320 (70X36)	F–60	275000	202830	1483
SBWG–11–2B	442 : 1	360 (80X40)	F–60	442000	326002	2239
* SBWG–12–2B	490 : 1	400 (90X45)	F–60 , (F–80)	610000	449913	3116
* SBWG–13–2B	544 : 1	420 (100X50)	F–60 , (F–80)	970000	715435	4118

Size and component specification in this catalogue are subject to change without prior notice for quality improvement.
* Mark has been changed and updated.

STANDARD TYPE-C

Vertical Input with Double Reduction Gear Attachment

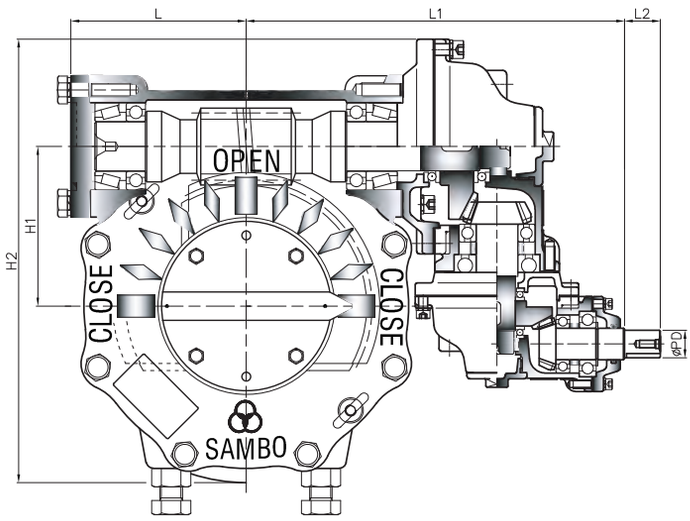

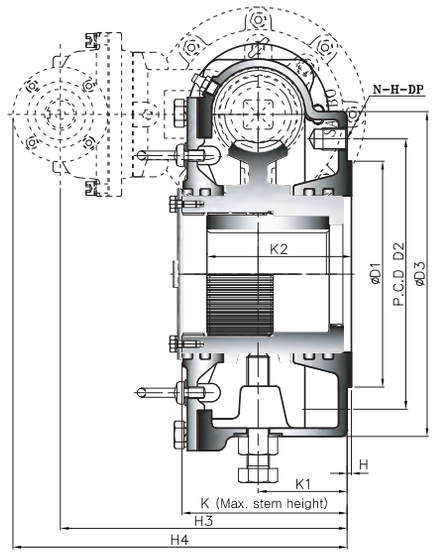

• Pin hole size is same as tap out diameter

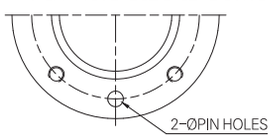

TYPE - A

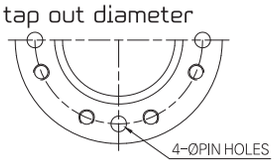

TYPE - B

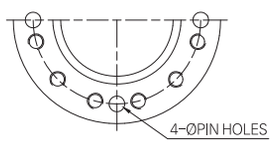

TYPE - C

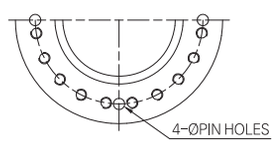

TYPE - D

Dimension >>>

UNIT : mm

MODEL \ DIM	BASE PART							EXTERNAL PART									INPUT SHAFT PART			HAND WHEEL
	TYPE	FLANGE	ØD1	P.C.D ØD2	P.C.D N-H-DP	ØD3	H	H1	H2	H3	H4	K	K1	K2	L	L1	L2	ØPD	KEY	
SBWG-00-2BD	A	F-12	85	125	4-M12-18	165	2	69.5	214.5	162	202	86.5	43	53.6	86	215	34	26	8X7	250
SBWG-01-2BD		F-14	100	140	4-M16-24	190		82.5	240	172	212	96	53	65	95	224				
SBWG-02-2BD		F-16	130	165	4-M20-30	220		97	284.5	202	242	111.5	58	75.5	108	253	34	26	8X7	250
SBWG-03-2BD	B	F-16 (F-20)	160	205	8-M16-24	250	3	112	314.5	205	245	118	61	87	118	263	34	26	8X7	250
SBWG-35-2BD		F-25	200	254	8-M16-24	300		127	354.5	222	262	135	72	100	125	281				
SBWG-04-2BD		F-25	200	254	8-M16-24	300		153	406.5	242	292	147	73	120	153	333.5	34	26	8X7	300
* SBWG-05-2BD		F-30	230	298	8-M20-30	350		180	458.5	247	297	155	78	141	163	343.5				
SBWG-55-2BD						350		202	505.5	249	299	162	80	144	183	363.5				
SBWG-06-2BD		F-35	260	356	8-M30-45	415		230	598.5	332.5	382.5	200	109	173	217	442.5	34	26	8X7	400
SBWG-07-2BD		F-40	300	406	8-M36-55	475		280.5	700.5	338.5	388.5	227	116	209	252	503.5				500
SBWG-75-2BD	C	F-48	370	483	12-M36-55	560	5	326	818.5	446.5	496.5	246	120	220	279	566	34	26	8X7	630
SBWG-08-2BD						560		379	954	475	530	254	125	245	314	678		32	10X8	
SBWG-09-2BD	D	F-60	470	603	20-M36-55	700	5	448.5	1118.5	496.5	561.5	284	138	270	354	738	34	32	10X8	710
SBWG-10-2BD						800		513	1281	563	628	352	164	330	426	922				
SBWG-11-2BD						900		616.5	1489.5	580	645	394	181	370	468.5	965.5				
* SBWG-12-2BD		F-80	670	813	20-M42-63	1000		711	1711	771	853.5	482	265	415	554	1152	44	38	12X8	800
* SBWG-13-2BD						1000		809	1941.5	842	924.5	546	301	515	609	1238				900

Size and component specification in this catalogue are subject to change without prior notice for quality improvement.
* Mark has been changed and updated.

Feature >>>

- All mounting bases conform to ISO 5210/1 standards.
- All castings are ductile iron, Class 65-45-12 excellent strength and impact resistance.
- Worm gear material is available in two option.
  - Ductile iron,Class 80-55-06
  - Aluminum bronze, B148-C95800
- Worm is 1045 heat treated Carbon steel.
- Removable splined bushing to permit accurate positioning between gear drive and valve stem.
- Options include hand wheels, chain and etc.

Bushing Type

Splines permit accurate alignment of valve stem key.

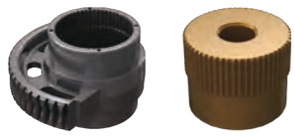

Global Leader SAMBO SPIRAL BEVEL GEAR ACTUATORS

The World's Highest Quality!

M·O·V OPTION

Worm Gear can be provided with Motor actuator input flanges to accept standard ISO Mounting Base.

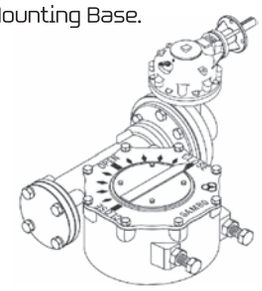

LOCKING DEVICE OPTION

Input can be equipped with a Handwheel locking device for Manually operated units.

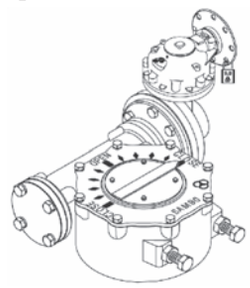

Selection Chart for Manual Operation >>>

SIZE / MODEL	GEAR RATIO	MAX. STEM ACCEPTANCE	BASE MOUNTING OPTION & STANDARD	MAX. TORQUE CAPACITY		WEIGHT
				N–m	Ft . lbf	Kg
SBWG–00–2BD	160 : 1	36 (10X8)	F–10 , F–12	1200	885	20
SBWG–01–2BD	176 : 1	46 (14X9)	F–10 , F–12 , F–14	2000	1475	23
SBWG–02–2BD	240 : 1	60 (18X11)	F–12 , F–14 , F–16	2800	2065	34
SBWG–03–2BD	260 : 1	75 (20X12)	F–14 , F–16 , (F–20)	4300	3172	42
SBWG–35–2BD	260 : 1	80 (22X14)	F–16 , (F–20) , F–25	6100	4499	53
SBWG–04–2BD	420 : 1	95 (25X14)	F–16 , (F–20) , F–25	10400	7671	74
* SBWG–05–2BD	450 : 1	115 (32X18)	(F–20), F–25 , F–30	15900	11727	96
SBWG–55–2BD	465 : 1	125 (32X18)	F–25 , F–30	23500	17333	115
SBWG–06–2BD	768 : 1	140 (36X20)	F–25 , F–30 , F–35	32800	24192	185
SBWG–07–2BD	816 : 1	180 (45X25)	F–30 , F–35 , F–40	51100	37689	281
SBWG–75–2BD	990 : 1	210 (50X28)	F–35 , F–40 , F–48	81500	60111	404
SBWG–08–2BD	1270.5 : 1	250 (56X32)	F–40 , F–48	121000	89245	564
SBWG–09–2BD	1584 : 1	280 (63X32)	F–48 , F–60	192500	141981	950
SBWG–10–2BD	2080 : 1	320 (70X36)	F–60	275000	202830	1523
SBWG–11–2BD	2210 : 1	360 (80X40)	F–60	442000	326002	2279
* SBWG–12–2BD	2695 : 1	400 (90X45)	F–60 , (F–80)	610000	449913	3187
* SBWG–13–2BD	3264 : 1	420 (100X50)	F–60 , (F–80)	970000	715435	4217

Size and component specification in this catalogue are subject to change without prior notice for quality improvement.
* Mark has been changed and updated.

STANDARD TYPE-E

Vertical Input with Single Reduction Gear Attachment

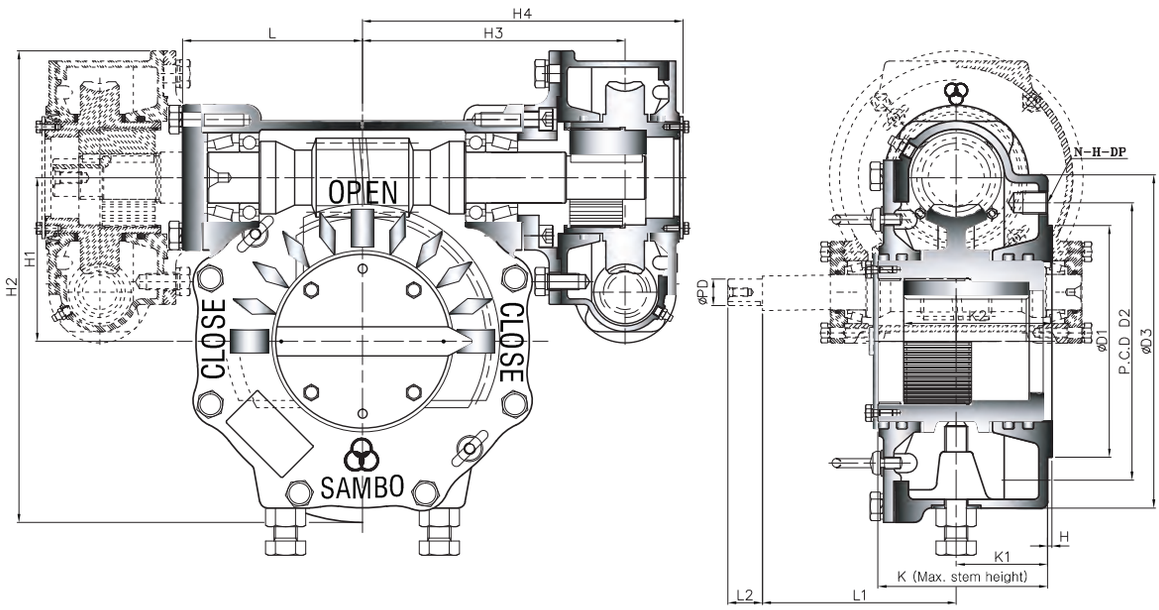

• Pin hole size is same as tap out diameter

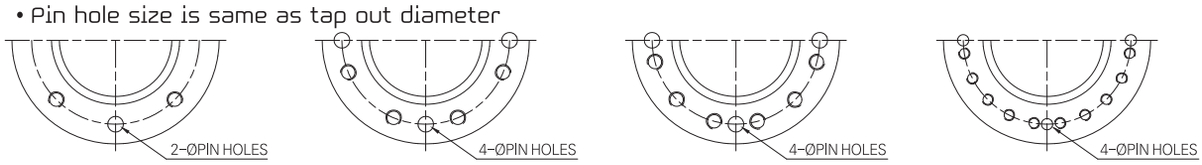

TYPE - A TYPE - B TYPE - C TYPE - D

Dimension >>>

UNIT : mm

DIM / MODEL	BASE PART							EXTERNAL PART									INPUT SHAFT PART			HAND WHEEL
	TYPE	FLANGE	ØD1	P.C.D ØD2	P.C.D N-H-DP	ØD3	H	H1	H2	H3	H4	K	K1	K2	L	L1	L2	ØPD	KEY	
SBWG-00-3W	A	F-12	85	125	4-M12-18	165	2	69.5	219.5	133	174	86.5	43	53.6	86	104.5	24	16	6X6	250
SBWG-01-3W		F-14	100	140	4-M16-24	190		82.5	245	142	183	96	53	65	95	104.5				
SBWG-02-3W		F-16	130	165	4-M20-30	220		97	289.5	173	219	111.5	58	75.5	108	138	29	21	6X6	300
SBWG-03-3W	B	F-16 (F-20)	160	205	8-M16-24	250	3	112	319.5	183	229	118	61	87	118	138	29	21	6X6	300
SBWG-35-3W		F-25	200	254	8-M16-24	300		127	359.5	203	248	126	63	91	125	147				400
SBWG-04-3W		F-25	200	254	8-M16-24	300		153	425.5	235	291	147	73	120	153	166	34	26	8X7	500
* SBWG-05-3W		F-30	230	298	8-M20-30	350		180	477.5	245	301	155	78	141	163	166				
SBWG-55-3W						350		202	539.5	273	332	162	80	144	183	176				560
SBWG-06-3W		F-35	260	356	8-M30-45	415		230	606	375	442	200	109	173	217	181				560
SBWG-07-3W		F-40	300	406	8-M36-55	475		280.5	708	410	477	227	116	209	252	181				
SBWG-75-3W	C	F-48	370	483	12-M36-55	560	5	326	828.5	393	470	246	120	220	279	207	34	32	10X8	630
SBWG-08-3W						560		379	961.5	438	518	254	125	245	314	217				710
SBWG-09-3W	D	F-60	470	603	20-M36-55	700	5	448.5	1126	480	568	284	138	270	354	237	34	32	10X8	710
SBWG-10-3W						800		513	1279.5	674	769.5	352	164	330	426	286	44	38	12X8	800
SBWG-11-3W						900		616.5	1539.5	722.5	843.5	400	181	370	468.5	341				900
* SBWG-12-3W		F-80	670	813	20-M42-63	1000		711	1781	805	935.5	484	265	455	554	381	58	50	16X10	1000
* SBWG-13-3W						1000		809	2034	850	985.5	546	301	515	609	416				

Size and component specification in this catalogue are subject to change without prior notice for quality improvement.
* Mark has been changed and updated.

Feature >>>

- All mounting bases conform to ISO 5210/1 standards.
- All castings are ductile iron, Class 65-45-12 excellent strength and impact resistance.
- Worm gear material is available in two option.
  - Ductile iron,Class 80-55-06
  - Aluminum bronze, B148-C95800
- Worm is 1045 heat treated Carbon steel.
- Removable splined bushing to permit accurate positioning between gear drive and valve stem.
- Options include hand wheels, chain and etc.

Bushing Type

Splines permit accurate alignment of valve stem key.

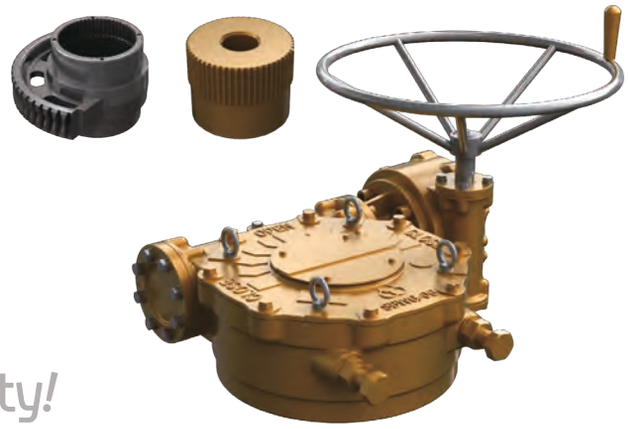

Global Leader SAMBO SPIRAL BEVEL GEAR ACTUATORS

The World's Highest Quality!

M·O·V OPTION

Worm Gear can be provided with Motor actuator input flanges to accept standard ISO Mounting Base.

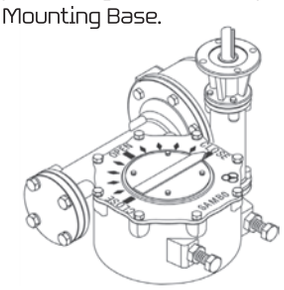

LOCKING DEVICE OPTION

Input can be equipped with a Handwheel locking device for Manually operated units.

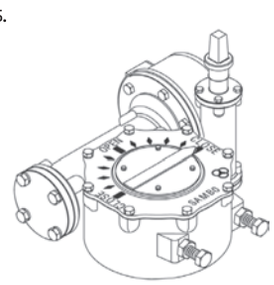

Selection Chart for Manual Operation >>>

SIZE / MODEL	GEAR RATIO	MAX. STEM ACCEPTANCE	BASE MOUNTING OPTION & STANDARD	MAX. TORQUE CAPACITY		WEIGHT
				N–m	Ft . lbf	Kg
SBWG–00–3W	1440 : 1	36 (10X8)	F–10 , F–12	1200	885	15
SBWG–01–3W	1584 : 1	46 (14X9)	F–10 , F–12 , F–14	2000	1475	18
SBWG–02–3W	1920 : 1	60 (18X11)	F–12 , F–14 , F–16	2800	2065	30
SBWG–03–3W	2080 : 1	75 (20X12)	F–14 , F–16 , (F–20)	4300	3172	38
SBWG–35–3W	2288 : 1	80 (22X14)	F–16 , (F–20) , F–25	6100	4499	56
SBWG–04–3W	2688 : 1	95 (25X14)	F–16 , (F–20) , F–25	10400	7671	77
* SBWG–05–3W	2880 : 1	115 (32X18)	(F–20), F–25 , F–30	15900	11727	99
SBWG–55–3W	3224 : 1	125 (32X18)	F–25 , F–30	23500	17333	126
SBWG–06–3W	3328 : 1	140 (36X20)	F–25 , F–30 , F–35	32800	24192	179
SBWG–07–3W	3536 : 1	180 (45X25)	F–30 , F–35 , F–40	51100	37689	275
SBWG–75–3W	3696 : 1	210 (50X28)	F–35 , F–40 , F–48	81500	60111	406
SBWG–08–3W	3960 : 1	250 (56X32)	F–40 , F–48	121000	89245	551
SBWG–09–3W	4092 : 1	280 (63X32)	F–48 , F–60	192500	141981	926
SBWG–10–3W	4096 : 1	320 (70X36)	F–60	275000	202830	1476
SBWG–11–3W	4624 : 1	360 (80X40)	F–60	442000	326002	2328
* SBWG–12–3W	4620 : 1	400 (90X45)	F–60 , (F–80)	610000	449913	3251
* SBWG–13–3W	4752 : 1	420 (100X50)	F–60 , (F–80)	970000	715435	4273

Size and component specification in this catalogue are subject to change without prior notice for quality improvement.
* Mark has been changed and updated.

STANDARD TYPE-E

Vertical Input with Double Reduction Gear Attachment

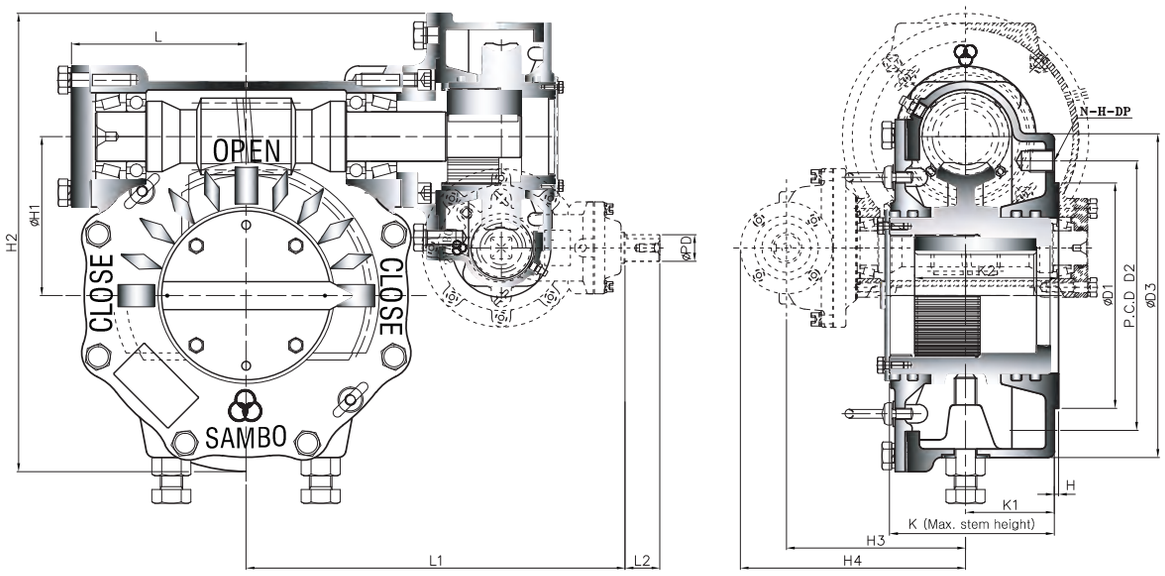

• Pin hole size is same as tap out diameter

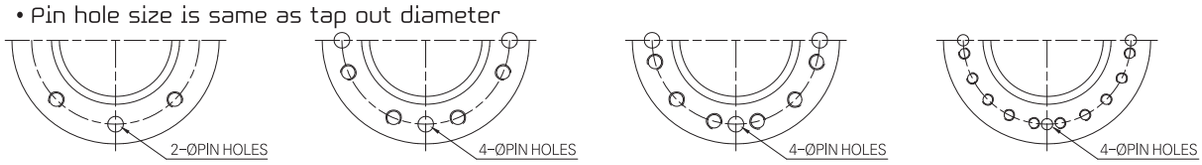

TYPE - A TYPE - B TYPE - C TYPE - D

Dimension >>>

UNIT : mm

MODEL \ DIM	BASE PART							EXTERNAL PART									INPUT SHAFT PART			HAND WHEEL
	TYPE	FLANGE	ØD1	P.C.D ØD2	P.C.D N-H-DP	ØD3	H	H1	H2	H3	H4	K	K1	K2	L	L1	L2	ØPD	KEY	
SBWG-00-3W2B	A	F-12	85	125	4-M12-18	165	2	69.5	219.5	113.5	153.5	86.5	43	53.6	86	222	34	26	8X7	250
SBWG-01-3W2B		F-14	100	140	4-M16-24	190		82.5	245	113.5	153.5	96	53	65	95	231				250
SBWG-02-3W2B		F-16	130	165	4-M20-30	220		97	289.5	126	166	111.5	58	75.5	108	262	34	26	8X7	250
SBWG-03-3W2B	B	F-16 (F-20)	160	205	8-M16-24	250	3	112	319.5	126	166	118	61	87	118	272	34	26	8X7	250
SBWG-35-3W2B		F-25	200	254	8-M16-24	300		127	359.5	135	175	126	63	91	125	292				250
SBWG-04-3W2B		F-25	200	254	8-M16-24	300		153	425.5	164	214	147	73	120	153	356				300
* SBWG-05-3W2B		F-30	230	298	8-M20-30	350		180	477.5	164	214	155	78	141	163	366				300
SBWG-55-3W2B						350		202	539.5	174	224	162	80	144	183	394				300
SBWG-06-3W2B		F-35	260	356	8-M30-45	415		230	606	192	232	200	109	173	217	496				400
SBWG-07-3W2B		F-40	300	406	8-M36-55	475		280.5	708	192	232	227	116	209	252	531				500
SBWG-75-3W2B	C	F-48	370	483	12-M36-55	560	5	326	828.5	212.5	262.5	246	120	220	279	524	34	26	8X7	630
SBWG-08-3W2B						560		379	961.5	222.5	272.5	254	125	245	314	569				630
SBWG-09-3W2B	D	F-60	470	603	20-M36-55	700	5	448.5	1126	242.5	292.5	284	138	270	354	611	34	26	8X7	630
SBWG-10-3W2B						800		513	1279.5	312	377	352	164	330	426	862	34	32	10X8	710
SBWG-11-3W2B						900		616.5	1539.5	347	412	400	181	370	468.5	910.5				
* SBWG-12-3W2B		F-80	670	813	20-M42-63	1000		711	1781	380	445	484	265	455	554	1013	34	32	10X8	800
* SBWG-13-3W2B						1000		809	2033	466	548.5	546	301	515	609	1116	44	38	12X8	800

Size and component specification in this catalogue are subject to change without prior notice for quality improvement.
* Mark has been changed and updated.

Feature >>>

- All mounting bases conform to ISO 5210/1 standards.
- All castings are ductile iron, Class 65-45-12 excellent strength and impact resistance.
- Worm gear material is available in two option.
  - Ductile iron,Class 80-55-06
  - Aluminum bronze, B148-C95800
- Worm is 1045 heat treated Carbon steel.
- Removable splined bushing to permit accurate positioning between gear drive and valve stem.
- Options include hand wheels, chain and etc.

Bushing Type

Splines permit accurate alignment of valve stem key.

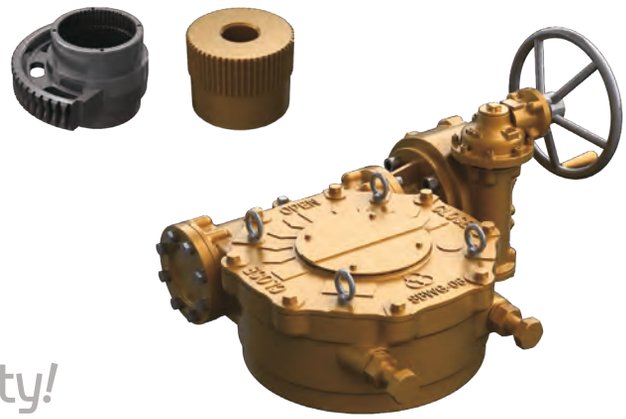

Global Leader SAMBO SPIRAL BEVEL GEAR ACTUATORS

The World's Highest Quality!

M·O·V OPTION

Worm Gear can be provided with Motor actuator input flanges to accept standard ISO Mounting Base.

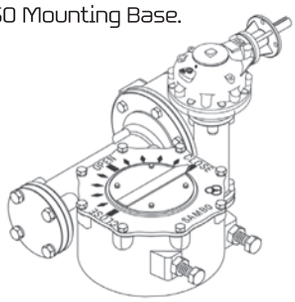

LOCKING DEVICE OPTION

Input can be equipped with a Handwheel locking device for Manually operated units.

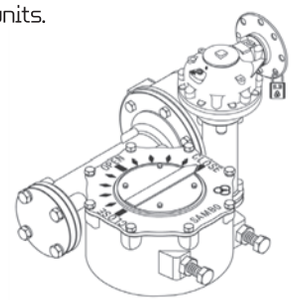

Selection Chart for Manual Operation >>>

SIZE / MODEL	GEAR RATIO	MAX. STEM ACCEPTANCE	BASE MOUNTING OPTION & STANDARD	MAX. TORQUE CAPACITY		WEIGHT
				N–m	Ft . lbf	Kg
SBWG–00–3W2B	1440 : 1	36 (10X8)	F–10 , F–12	1200	885	20
SBWG–01–3W2B	1584 : 1	46 (14X9)	F–10 , F–12 , F–14	2000	1475	23
SBWG–02–3W2B	1920 : 1	60 (18X11)	F–12 , F–14 , F–16	2800	2065	35
SBWG–03–3W2B	2080 : 1	75 (20X12)	F–14 , F–16 , (F–20)	4300	3172	43
SBWG–35–3W2B	2288 : 1	80 (22X14)	F–16 , (F–20) , F–25	6100	4499	60
SBWG–04–3W2B	3360 : 1	95 (25X14)	F–16 , (F–20) , F–25	10400	7671	85
* SBWG–05–3W2B	3600 : 1	115 (32X18)	(F–20), F–25 , F–30	15900	11727	107
SBWG–55–3W2B	4030 : 1	125 (32X18)	F–25 , F–30	23500	17333	134
SBWG–06–3W2B	4160 : 1	140 (36X20)	F–25 , F–30 , F–35	32800	24192	187
SBWG–07–3W2B	4420 : 1	180 (45X25)	F–30 , F–35 , F–40	51100	37689	283
SBWG–75–3W2B	5544 : 1	210 (50X28)	F–35 , F–40 , F–48	81500	60111	416
SBWG–08–3W2B	5940 : 1	250 (56X32)	F–40 , F–48	121000	89245	561
SBWG–09–3W2B	6138 : 1	280 (63X32)	F–48 , F–60	192500	141981	936
SBWG–10–3W2B	8192 : 1	320 (70X36)	F–60	275000	202830	1506
SBWG–11–3W2B	9248 : 1	360 (80X40)	F–60	442000	326002	2358
* SBWG–12–3W2B	11550 : 1	400 (90X45)	F–60 , (F–80)	610000	449913	3291
* SBWG–13–3W2B	13068 : 1	420 (100X50)	F–60 , (F–80)	970000	715435	4313

Size and component specification in this catalogue are subject to change without prior notice for quality improvement.
* Mark has been changed and updated.

PART TURN 135°

Horizontal Input

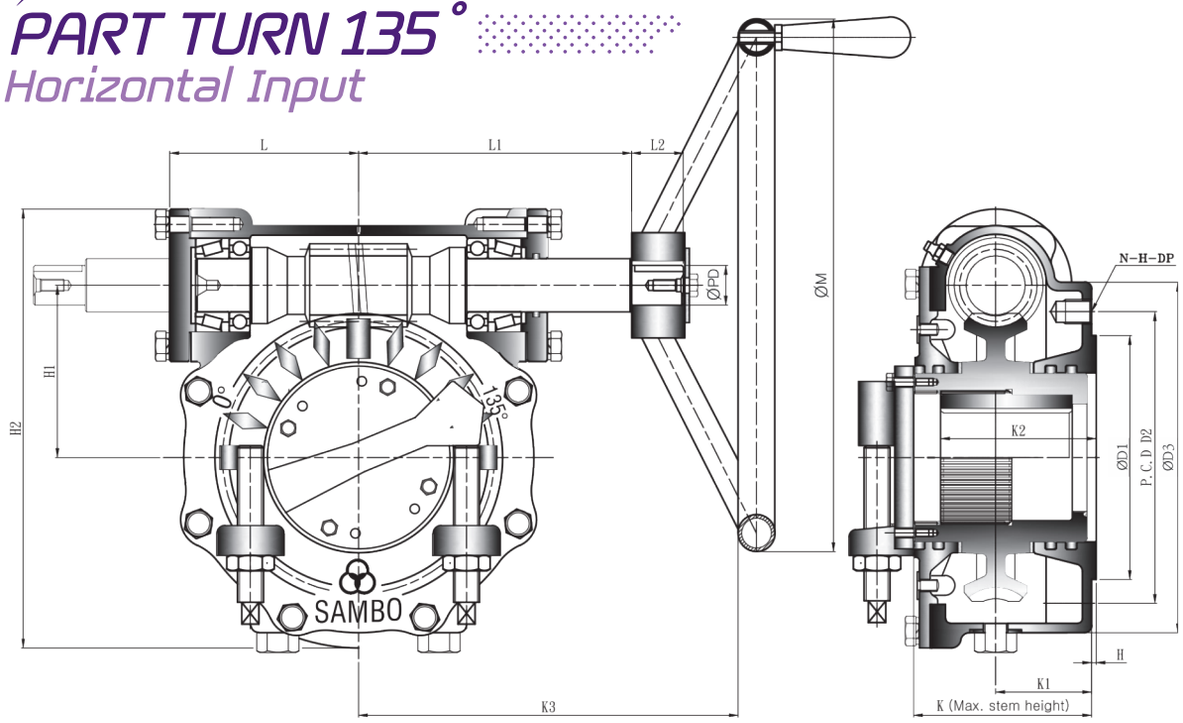

• Pin hole size is same as tap out diameter

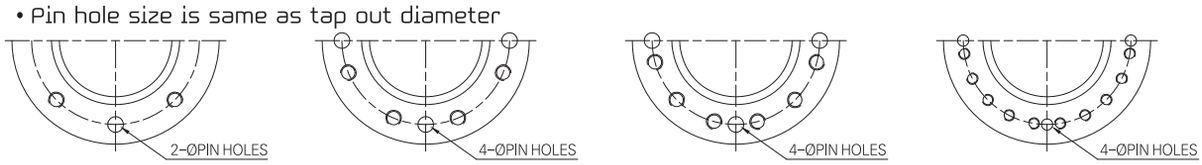

TYPE - A TYPE - B TYPE - C TYPE - D

Dimension >>>

UNIT : mm

MODEL \ DIM	BASE PART							EXTERNAL PART								INPUT SHAFT PART			HAND WHEEL
	TYPE	FLANGE	ØD1	P.C.D ØD2	P.C.D N-H-DP	ØD3	H	H1	H2	K	K1	K2	K3	L	L1	L2	ØPD	KEY	
* SBWG-BF 135	A	F-07	55	70	4-M8-12	110	2	42	132	76	38	38.6	150	64	97	24	16	6X6	200
SBWG-0 135		F-10	70	102	4-M10-15	135		57	159.5	77	38	43.6	177	71.5	104.5				250
SBWG-00 135		F-12	85	125	4-M12-18	165		69.5	192	86.5	43	53.6	230	86	138	29	21	6X6	300
SBWG-01 135		F-14	100	140	4-M16-24	190		82.5	217.5	96	53	65	260	95	147				400
SBWG-02 135		F-16	130	165	4-M20-30	220		97	257	111.5	58	75.5	294	108	166	34	26	8X7	500
SBWG-03 135	B	F-16 (F-20)	160	205	8-M16-24	250	3	112	287	118	61	87	324	118	176	34	26	8X7	560
SBWG-35 135		F-25	200	254	8-M16-24	300		127	327	135	72	100	342	136	194				
SBWG-04 135		F-25	200	254	8-M16-24	300		153	385.5	147	73	120	370	153	207	34	32	10X8	630
* SBWG-05 135		F-30	230	298	8-M20-30	350		180	437.5	155	78	141	400	163	217				710
SBWG-55 135						350		202	484.5	162	80	144	420	183	237				
SBWG-06 135		F-35	260	356	8-M30-45	415		230	558.5	200	109	173	489	217	286	44	38	12X8	800
SBWG-07 135		F-40	300	406	8-M36-55	475		280.5	660.5	227	116	209	538	252	320				900
SBWG-75 135	C	F-48	370	483	12-M36-55	560	5	326	776	246	120	220	617	279	381	58	50	16X10	1000
SBWG-08 135						560		379	884	254	125	245	652	314	416				
SBWG-09 135	D	F-60	470	603	20-M36-55	700	5	448.5	1023.5	284	138	270	692	354	456	58	50	16X10	1000
SBWG-10 135						800		513	1191	352	164	330	814	426	614				
SBWG-11 135						900		616.5	1399.5	394	181	370	857	468.5	657				
* SBWG-12 135		F-80	670	813	20-M42-63	1000		711	1621	482	265	415	980	554	702				
* SBWG-13 135						1000		809	1814	546	301	515	988	609	752				

Size and component specification in this catalogue are subject to change without prior notice for quality improvement.
* Mark has been changed and updated.

Feature >>>

- All mounting bases conform to ISO 5210/1 standards.
- All castings are ductile iron, Class 65-45-12 excellent strength and impact resistance.
- Worm gear material is available in two option.
  - Ductile iron,Class 80-55-06
  - Aluminum bronze, B148-C95800
- Worm is 1045 heat treated Carbon steel.
- Removable splined bushing to permit accurate positioning between gear drive and valve stem.
- Options include hand wheels, chain and etc.

Global Leader SAMBO SPIRAL BEVEL GEAR ACTUATORS

The World's Highest Quality!

Bushing Type

Splines permit accurate alignment of valve stem key.

M·O·V OPTION

Worm Gear can be provided with Motor actuator input flanges to accept standard ISO Mounting Base.

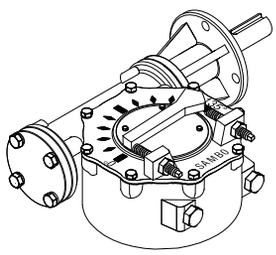

LOCKING DEVICE OPTION

Input can be equipped with a Handwheel locking device for Manually operated units.

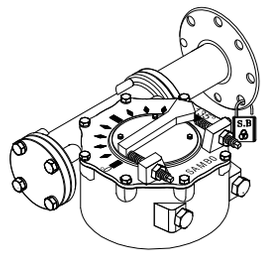

Selection Chart for Manual Operation >>>

SIZE / MODEL	GEAR RATIO	MAX. STEM ACCEPTANCE	BASE MOUNTING OPTION & STANDARD	MAX. TORQUE CAPACITY		WEIGHT
				N–m	Ft . lbf	Kg
* SBWG–BF 135	32 : 1	20 (6X6)	F–05, F–07	360	266	5
SBWG–0 135	36 : 1	28 (8X7)	F–07 , F–10	780	575	8
SBWG–00 135	40 : 1	36 (10X8)	F–10 , F–12	1200	885	13
SBWG–01 135	44 : 1	46 (14X9)	F–10 , F–12 , F–14	2000	1475	16
SBWG–02 135	48 : 1	60 (18X11)	F–12 , F–14 , F–16	2800	2065	24
SBWG–03 135	52 : 1	75 (20X12)	F–14 , F–16 , (F–20)	4300	3172	43
SBWG–35 135	52 : 1	80 (22X14)	F–16 , (F–20) , F–25	6100	4499	37
SBWG–04 135	56 : 1	95 (25X14)	F–16 , (F–20) , F–25	10400	7671	62
* SBWG–05 135	60 : 1	115 (32X18)	(F–20), F–25 , F–30	15900	11727	84
SBWG–55 135	62 : 1	125 (32X18)	F–25 , F–30	23500	17333	105
SBWG–06 135	64 : 1	140 (36X20)	F–25 , F–30 , F–35	32800	24192	157
SBWG–07 135	68 : 1	180 (45X25)	F–30 , F–35 , F–40	51100	37689	255
SBWG–75 135	66 : 1	210 (50X28)	F–35 , F–40 , F–48	81500	60111	364
SBWG–08 135	66 : 1	250 (56X32)	F–40 , F–48	121000	89245	489
SBWG–09 135	66 : 1	280 (63X32)	F–48 , F–60	192500	141981	847
SBWG–10 135	64 : 1	320 (70X36)	F–60	275000	202830	1347
SBWG–11 135	68 : 1	360 (80X40)	F–60	442000	326002	2105
* SBWG–12 135	70 : 1	400 (90X45)	F–60 , (F–80)	610000	449913	2923
* SBWG–13 135	72 : 1	420 (100X50)	F–60 , (F–80)	970000	715435	3825

Size and component specification in this catalogue are subject to change without prior notice for quality improvement.
* Mark has been changed and updated.

PART TURN 135°

Horizontal Input with Single Reduction Gear Attachment

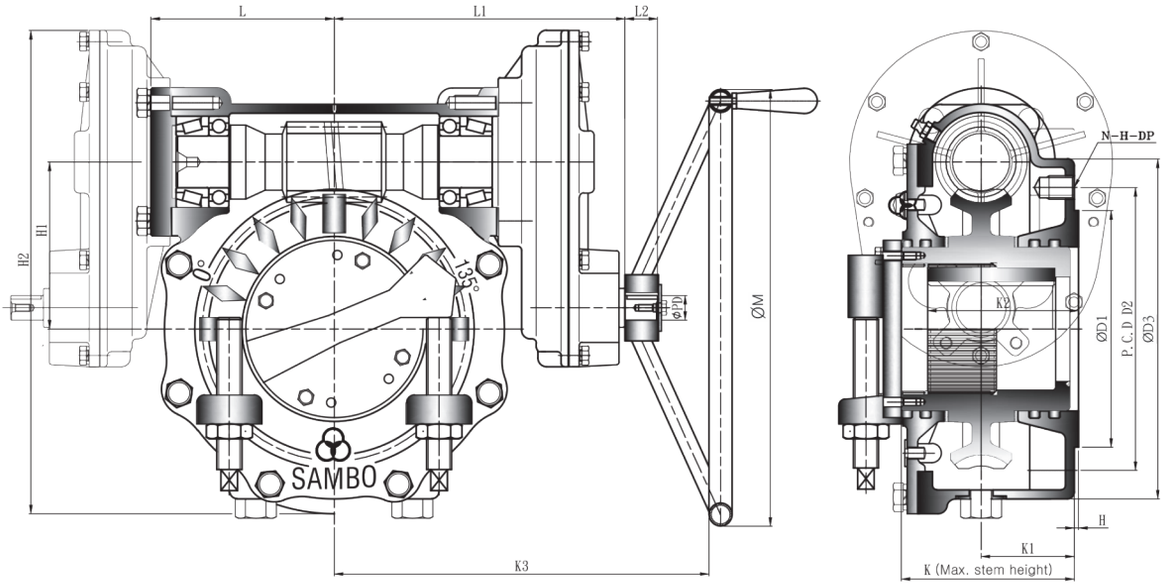

• Pin hole size is same as tap out diameter

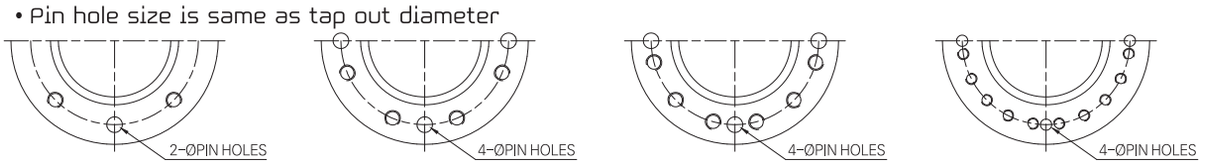

TYPE - A TYPE - B TYPE - C TYPE - D

Dimension >>>

UNIT : mm

MODEL \ DIM	BASE PART							EXTERNAL PART								INPUT SHAFT PART			HAND WHEEL
	TYPE	FLANGE	ØD1	P.C.D ØD2	P.C.D N-H-DP	ØD3	H	H1	H2	K	K1	K2	K3	L	L1	L2	ØPD	KEY	
SBWG-00-1S 135	A	F-12	85	125	4-M12-18	165	2	69.5	210	86.5	43	53.6	259	86	166	29	21	6X6	300
SBWG-01-1S 135		F-14	100	140	4-M16-24	190		82.5	235.5	96	53	65	288	95	175				400
SBWG-02-1S 135		F-16	130	165	4-M20-30	220		97	282	111.5	58	75.5	329	108	190.5	34	26	8X7	500
SBWG-03-1S 135	B	F-16 (F-20)	160	205	8-M16-24	250	3	112	312	118	61	87	349	118	200.5	34	26	8X7	560
SBWG-35-1S 135		F-25	200	254	8-M16-24	300		127	352	135	72	100	367	125	218.5				
SBWG-04-1S 135		F-25	200	254	8-M16-24	300		153	417.5	147	73	120	413	153	250	34	32	10X8	630
* SBWG-05-1S 135		F-30	230	298	8-M20-30	350		180	469.5	155	78	141	443	163	260				710
SBWG-55-1S 135						350		202	516.5	162	80	144	463	183	280				
SBWG-06-1S 135		F-35	260	356	8-M30-45	415		230	621	200	109	173	552	217	349	44	38	12X8	800
SBWG-07-1S 135		F-40	300	406	8-M36-55	475		280.5	723	227	116	209	607	252	384				900
SBWG-75-1S 135	C	F-48	370	483	12-M36-55	560	5	326	860	246	120	220	721	279	485	58	50	16X10	1000
SBWG-08-1S 135						560		379	968	254	125	245	756	314	520				
SBWG-09-1S 135	D	F-60	470	603	20-M36-55	700	5	448.5	1107.5	284	138	270	796	354	560	58	50	16X10	1000
SBWG-10-1S 135						800		513	1291	352	164	330	927	426	691				
SBWG-11-1S 135						900		616.5	1499.5	394	181	370	969.5	468.5	733.5				
* SBWG-12-1S 135		F-80	670	813	20-M42-63	1000		711	1751	482	265	415	1140	554	905				
* SBWG-13-1S 135						1000		809	1944	546	301	515	1190	609	955				

Size and component specification in this catalogue are subject to change without prior notice for quality improvement.
* Mark has been changed and updated.

Feature >>>

- All mounting bases conform to ISO 5210/1 standards.
- All castings are ductile iron, Class 65-45-12 excellent strength and impact resistance.
- Worm gear material is available in two option.
  - Ductile iron,Class 80-55-06
  - Aluminum bronze, B148-C95800
- Worm is 1045 heat treated Carbon steel.
- Removable splined bushing to permit accurate positioning between gear drive and valve stem.
- Options include hand wheels, chain and etc.

Global Leader SAMBO SPIRAL BEVEL GEAR ACTUATORS

The World's Highest Quality!

Bushing Type

Splines permit accurate alignment of valve stem key.

M·O·V OPTION

Worm Gear can be provided with Motor actuator input flanges to accept standard ISO Mounting Base.

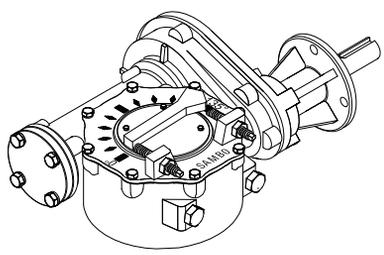

LOCKING DEVICE OPTION

Input can be equipped with a Handwheel locking device for Manually operated units.

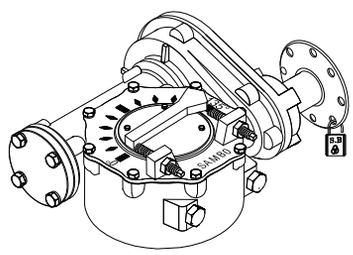

Selection Chart for Manual Operation >>>

SIZE / MODEL	GEAR RATIO	MAX. STEM ACCEPTANCE	BASE MOUNTING OPTION & STANDARD	MAX. TORQUE CAPACITY		WEIGHT
				N–m	Ft . lbf	Kg
SBWG–00–1S 135	80 : 1	36 (10X8)	F–10 , F–12	1200	885	15
SBWG–01–1S 135	88 : 1	46 (14X9)	F–10 , F–12 , F–14	2000	1475	18
SBWG–02–1S 135	121.6 : 1	60 (18X11)	F–12 , F–14 , F–16	2800	2065	27
SBWG–03–1S 135	131.7 : 1	75 (20X12)	F–14 , F–16 , (F–20)	4300	3172	37
SBWG–35–1S 135	131.7 : 1	80 (22X14)	F–16 , (F–20), F–25	6100	4499	51
SBWG–04–1S 135	168 : 1	95 (25X14)	F–16 , (F–20) , F–25	10400	7671	71
* SBWG–05–1S 135	180 : 1	115 (32X18)	(F–20), F–25 , F–30	15900	11727	94
SBWG–55–1S 135	186 : 1	125 (32X18)	F–25 , F–30	23500	17333	115
SBWG–06–1S 135	256 : 1	140 (36X20)	F–25 , F–30 , F–35	32800	24192	185
SBWG–07–1S 135	272 : 1	180 (45X25)	F–30 , F–35 , F–40	51100	37689	282
SBWG–75–1S 135	330 : 1	210 (50X28)	F–35 , F–40 , F–48	81500	60111	436
SBWG–08–1S 135	330 : 1	250 (56X32)	F–40 , F–48	121000	89245	561
SBWG–09–1S 135	330 : 1	280 (63X32)	F–48 , F–60	192500	141981	920
SBWG–10–1S 135	320 : 1	320 (70X36)	F–60	275000	202830	1444
SBWG–11–1S 135	340 : 1	360 (80X40)	F–60	442000	326002	2202
* SBWG–12–1S 135	350 : 1	400 (90X45)	F–60 , (F–80)	610000	449913	3103
* SBWG–13–1S 135	360 : 1	420 (100X50)	F–60 , (F–80)	970000	715435	4005

Size and component specification in this catalogue are subject to change without prior notice for quality improvement.
* Mark has been changed and updated.

PART TURN 135°

Horizontal Input with Double Reduction Gear Attachment

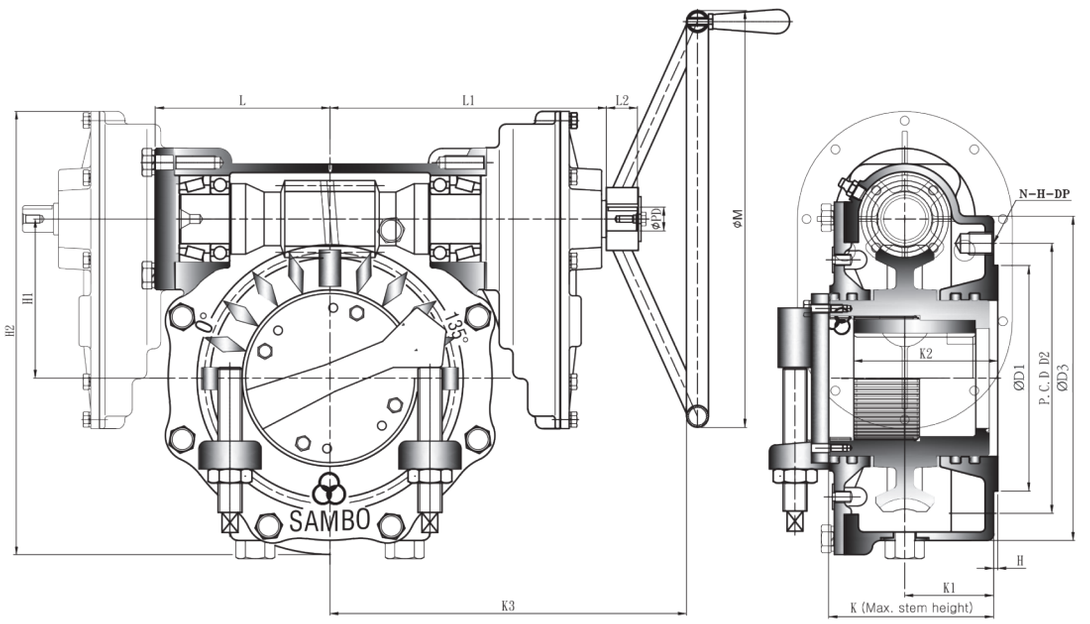

• Pin hole size is same as tap out diameter

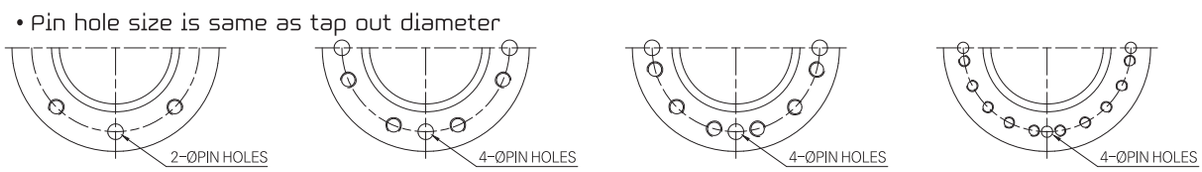

TYPE - A TYPE - B TYPE - C TYPE - D

Dimension >>>

UNIT : mm

MODEL \ DIM	BASE PART							EXTERNAL PART								INPUT SHAFT PART			HAND WHEEL
	TYPE	FLANGE	ØD1	P.C.D ØD2	P.C.D N-H-DP	ØD3	H	H1	H2	K	K1	K2	K3	L	L1	L2	ØPD	KEY	
SBWG-00-1SD 135	A	F-12	85	125	4-M12-18	165	2	69.5	210	86.5	43	53.6	276	86	183	29	21	6X6	300
SBWG-01-1SD 135		F-14	100	140	4-M16-24	190		82.5	235.5	96	53	65	305	95	192				400
SBWG-02-1SD 135		F-16	130	165	4-M20-30	220		97	282	111.5	58	75.5	343	108	214.5	34	26	8X7	500
SBWG-03-1SD 135	B	F-16 (F-20)	160	205	8-M16-24	250	3	112	312	118	61	87	373	118	224.5	34	26	8X7	560
SBWG-35-1SD 135		F-25	200	254	8-M16-24	300		127	352	135	72	100	385	125	236.5				
SBWG-04-1SD 135		F-25	200	254	8-M16-24	300		153	417.5	147	73	120	449	153	286	34	32	10X8	630
* SBWG-05-1SD 135		F-30	230	298	8-M20-30	350		180	469.5	155	78	141	479	163	296				710
SBWG-55-1SD 135						350		202	516.5	162	80	144	499	183	316				
SBWG-06-1SD 135		F-35	260	356	8-M30-45	415		230	621	200	109	173	579	217	376	44	38	12X8	800
SBWG-07-1SD 135		F-40	300	406	8-M36-55	475		280.5	723	227	116	209	634	252	411				900
SBWG-75-1SD 135	C	F-48	370	483	12-M36-55	560	5	326	860	246	120	220	767	279	531	58	50	16X10	1000
SBWG-08-1SD 135						560		379	968	254	125	245	802	314	566				
SBWG-09-1SD 135	D	F-60	470	603	20-M36-55	700	5	448.5	1107.5	284	138	270	842	354	606	58	50	16X10	1000
SBWG-10-1SD 135						800		513	1291	352	164	330	982	426	746				
SBWG-11-1SD 135						900		616.5	1499.5	394	181	370	1039.5	468.5	788.5				
* SBWG-12-1SD 135		F-80	670	813	20-M42-63	1000		711	1751	482	265	415	1205	554	969				
* SBWG-13-1SD 135						1000		809	1944	546	301	515	1245	609	1009				

Size and component specification in this catalogue are subject to change without prior notice for quality improvement.
* Mark has been changed and updated.

Feature >>>

- All mounting bases conform to ISO 5210/1 standards.
- All castings are ductile iron, Class 65-45-12 excellent strength and impact resistance.
- Worm gear material is available in two option.
  - Ductile iron,Class 80-55-06
  - Aluminum bronze, B148-C95800
- Worm is 1045 heat treated Carbon steel.
- Removable splined bushing to permit accurate positioning between gear drive and valve stem.
- Options include hand wheels, chain and etc.

Global Leader SAMBO SPIRAL BEVEL GEAR ACTUATORS

The World's Highest Quality!

Bushing Type

Splines permit accurate alignment of valve stem key.

M·O·V OPTION

Worm Gear can be provided with Motor actuator input flanges to accept standard ISO Mounting Base.

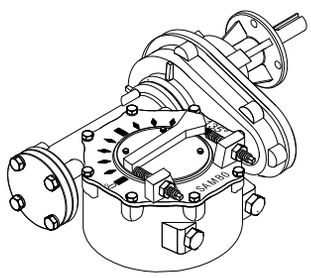

LOCKING DEVICE OPTION

Input can be equipped with a Handwheel locking device for Manually operated units.

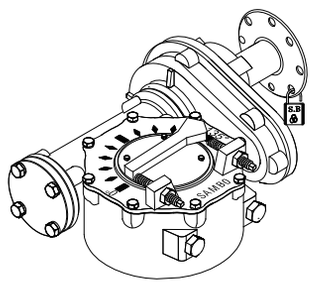

Selection Chart for Manual Operation >>>

SIZE / MODEL	MAX. GEAR RATIO (Changeable)	MAX. STEM ACCEPTANCE	BASE MOUNTING OPTION & STANDARD	MAX. TORQUE CAPACITY		WEIGHT
				N–m	Ft . lbf	Kg
SBWG–00–1SD 135	160 : 1	36 (10X8)	F–10 , F–12	1200	885	17
SBWG–01–1SD 135	176 : 1	46 (14X9)	F–10 , F–12 , F–14	2000	1475	20
SBWG–02–1SD 135	308 : 1	60 (18X11)	F–12 , F–14 , F–16	2800	2065	30
SBWG–03–1SD 135	333.7 : 1	75 (20X12)	F–14 , F–16 , (F–20)	4300	3172	39
SBWG–35–1SD 135	333.7 : 1	80 (22X14)	F–16 , (F–20) , F–25	6100	4499	53
SBWG–04–1SD 135	504 : 1	95 (25X14)	F–16 , (F–20) , F–25	10400	7671	76
* SBWG–05–1SD 135	540 : 1	115 (32X18)	(F–20), F–25 , F–30	15900	11727	99
SBWG–55–1SD 135	558 : 1	125 (32X18)	F–25 , F–30	23500	17333	120
SBWG–06–1SD 135	1024 : 1	140 (36X20)	F–25 , F–30 , F–35	32800	24192	198
SBWG–07–1SD 135	1088 : 1	180 (45X25)	F–30 , F–35 , F–40	51100	37689	296
SBWG–75–1SD 135	1650 : 1	210 (50X28)	F–35 , F–40 , F–48	81500	60111	464
SBWG–08–1SD 135	1650 : 1	250 (56X32)	F–40 , F–48	121000	89245	589
SBWG–09–1SD 135	1650 : 1	280 (63X32)	F–48 , F–60	192500	141981	947
SBWG–10–1SD 135	1600 : 1	320 (70X36)	F–60	275000	202830	1482
SBWG–11–1SD 135	1700 : 1	360 (80X40)	F–60	442000	326002	2240
* SBWG–12–1SD 135	1750 : 1	400 (90X45)	F–60 , (F–80)	610000	449913	3103
* SBWG–13–1SD 135	1800 : 1	420 (100X50)	F–60 , (F–80)	970000	715435	4005

Size and component specification in this catalogue are subject to change without prior notice for quality improvement.
* Mark has been changed and updated.

PART TURN 180°

Horizontal Input

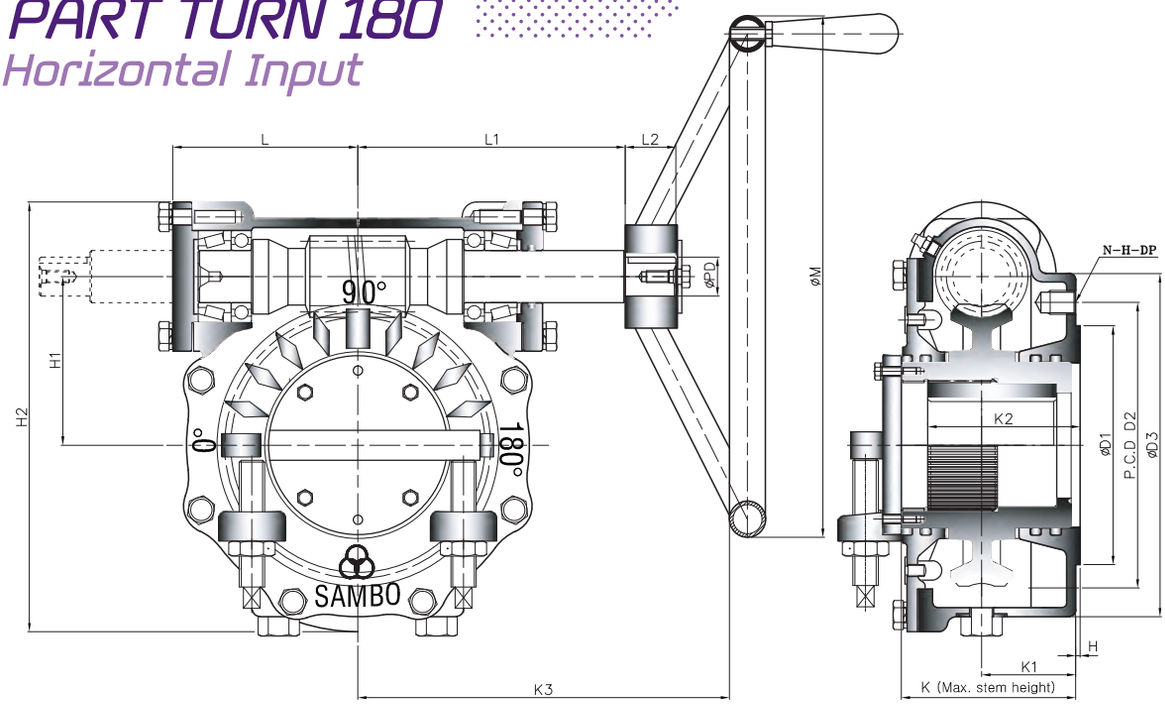

• Pin hole size is same as tap out diameter

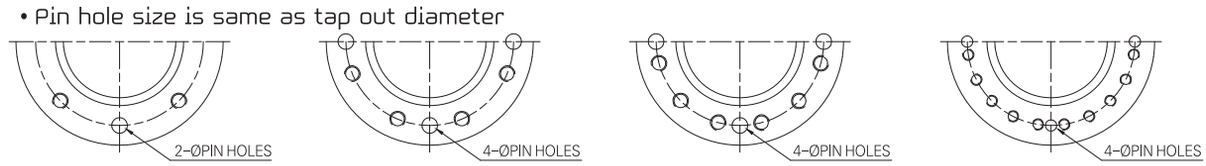

TYPE - A TYPE - B TYPE - C TYPE - D

Dimension >>>

UNIT : mm

MODEL \ DIM	BASE PART							EXTERNAL PART								INPUT SHAFT PART			HAND WHEEL
	TYPE	FLANGE	ØD1	P.C.D ØD2	P.C.D N-H-DP	ØD3	H	H1	H2	K	K1	K2	K3	L	L1	L2	ØPD	KEY	
* SBWG-BF 180	A	F-07	55	70	4-M8-12	110	2	42	132	76	38	38.6	150	64	97	24	16	6X6	200
SBWG-0 180		F-10	70	102	4-M10-15	135		57	159.5	77	38	43.6	177	71.5	104.5				250
SBWG-00 180		F-12	85	125	4-M12-18	165		69.5	192	86.5	43	53.6	230	86	138	29	21	6X6	300
SBWG-01 180		F-14	100	140	4-M16-24	190		82.5	217.5	96	53	65	260	95	147				400
SBWG-02 180		F-16	130	165	4-M20-30	220		97	257	111.5	58	75.5	294	108	166	34	26	8X7	500
SBWG-03 180	B	F-16 (F-20)	160	205	8-M16-24	250	3	112	287	118	61	87	324	118	176	34	26	8X7	560
SBWG-35 180		F-25	200	254	8-M16-24	300		127	327	135	72	100	342	136	194				
SBWG-04 180		F-25	200	254	8-M16-24	300		153	385.5	147	73	120	370	153	207	34	32	10X8	630
* SBWG-05 180		F-30	230	298	8-M20-30	350		180	437.5	155	78	141	400	163	217				710
SBWG-55 180						350		202	484.5	162	80	144	420	183	237				
SBWG-06 180		F-35	260	356	8-M30-45	415		230	558.5	200	109	173	489	217	286	44	38	12X8	800
SBWG-07 180		F-40	300	406	8-M36-55	475		280.5	660.5	227	116	209	538	252	320				900
SBWG-75 180	C	F-48	370	483	12-M36-55	560	5	326	776	246	120	220	617	279	381	58	50	16X10	1000
SBWG-08 180						560		379	884	254	125	245	652	314	416				
SBWG-09 180	D	F-60	470	603	20-M36-55	700	5	448.5	1023.5	284	138	270	692	354	456	58	50	16X10	1000
SBWG-10 180						800		513	1191	352	164	330	814	426	614				
SBWG-11 180						900		616.5	1399.5	394	181	370	857	468.5	657				
* SBWG-12 180		F-80	670	813	20-M42-63	1000		711	1621	482	265	415	980	554	702				
* SBWG-13 180						1000		809	1814	546	301	515	988	609	752				

Size and component specification in this catalogue are subject to change without prior notice for quality improvement.
* Mark has been changed and updated.

Feature >>>

- All mounting bases conform to ISO 5210/1 standards.
- All castings are ductile iron, Class 65-45-12 excellent strength and impact resistance.
- Worm gear material is available in two option.
  - Ductile iron,Class 80-55-06
  - Aluminum bronze, B148-C95800
- Worm is 1045 heat treated Carbon steel.
- Removable splined bushing to permit accurate positioning between gear drive and valve stem.
- Options include hand wheels, chain and etc.

Global Leader SAMBO SPIRAL BEVEL GEAR ACTUATORS

The World's Highest Quality!

Bushing Type

Splines permit accurate alignment of valve stem key.

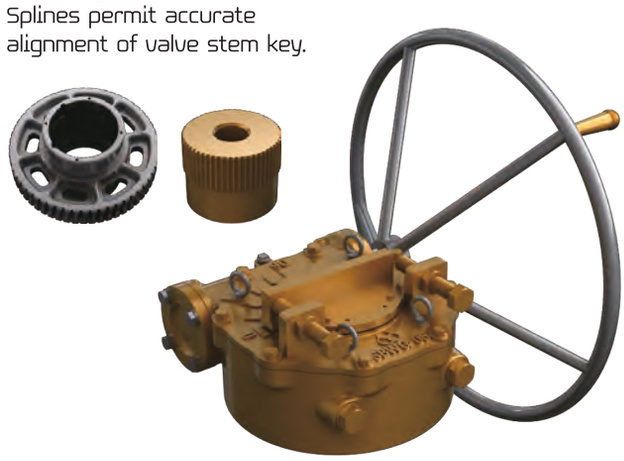

M·O·V OPTION

Worm Gear can be provided with Motor actuator input flanges to accept standard ISO Mounting Base.

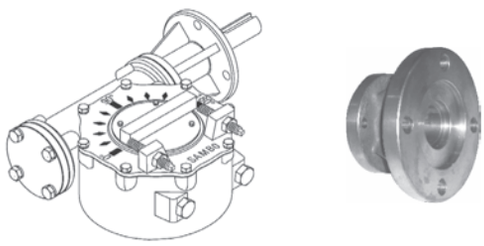

LOCKING DEVICE OPTION

Input can be equipped with a Handwheel locking device for Manually operated units.

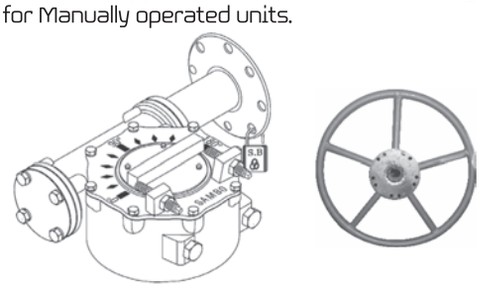

Selection Chart for Manual Operation >>>

SIZE / MODEL	GEAR RATIO	MAX. STEM ACCEPTANCE	BASE MOUNTING OPTION & STANDARD	MAX. TORQUE CAPACITY		WEIGHT
				N–m	Ft . lbf	Kg
* SBWG–BF 180	32 : 1	20 (6X6)	F–05, F–07	360	266	5
SBWG–0 180	36 : 1	28 (8X7)	F–07 , F–10	780	575	8
SBWG–00 180	40 : 1	36 (10X8)	F–10 , F–12	1200	885	13
SBWG–01 180	44 : 1	46 (14X9)	F–10 , F–12 , F–14	2000	1475	16
SBWG–02 180	48 : 1	60 (18X11)	F–12 , F–14 , F–16	2800	2065	24
SBWG–03 180	52 : 1	75 (20X12)	F–14 , F–16 , (F–20)	4300	3172	43
SBWG–35 180	52 : 1	80 (22X14)	F–16 , (F–20) , F–25	6100	4499	37
SBWG–04 180	56 : 1	95 (25X14)	F–16 , (F–20) , F–25	10400	7671	62
* SBWG–05 180	60 : 1	115 (32X18)	(F–20), F–25 , F–30	15900	11727	84
SBWG–55 180	62 : 1	125 (32X18)	F–25 , F–30	23500	17333	105
SBWG–06 180	64 : 1	140 (36X20)	F–25 , F–30 , F–35	32800	24192	157
SBWG–07 180	68 : 1	180 (45X25)	F–30 , F–35 , F–40	51100	37689	255
SBWG–75 180	66 : 1	210 (50X28)	F–35 , F–40 , F–48	81500	60111	364
SBWG–08 180	66 : 1	250 (56X32)	F–40 , F–48	121000	89245	489
SBWG–09 180	66 : 1	280 (63X32)	F–48 , F–60	192500	141981	847
SBWG–10 180	64 : 1	320 (70X36)	F–60	275000	202830	1347
SBWG–11 180	68 : 1	360 (80X40)	F–60	442000	326002	2105
* SBWG–12 180	70 : 1	400 (90X45)	F–60 , (F–80)	610000	449913	2923
* SBWG–13 180	72 : 1	420 (100X50)	F–60 , (F–80)	970000	715435	3825

Size and component specification in this catalogue are subject to change without prior notice for quality improvement.
* Mark has been changed and updated.

PART TURN 180°

Horizontal Input with Single Reduction Gear Attachment

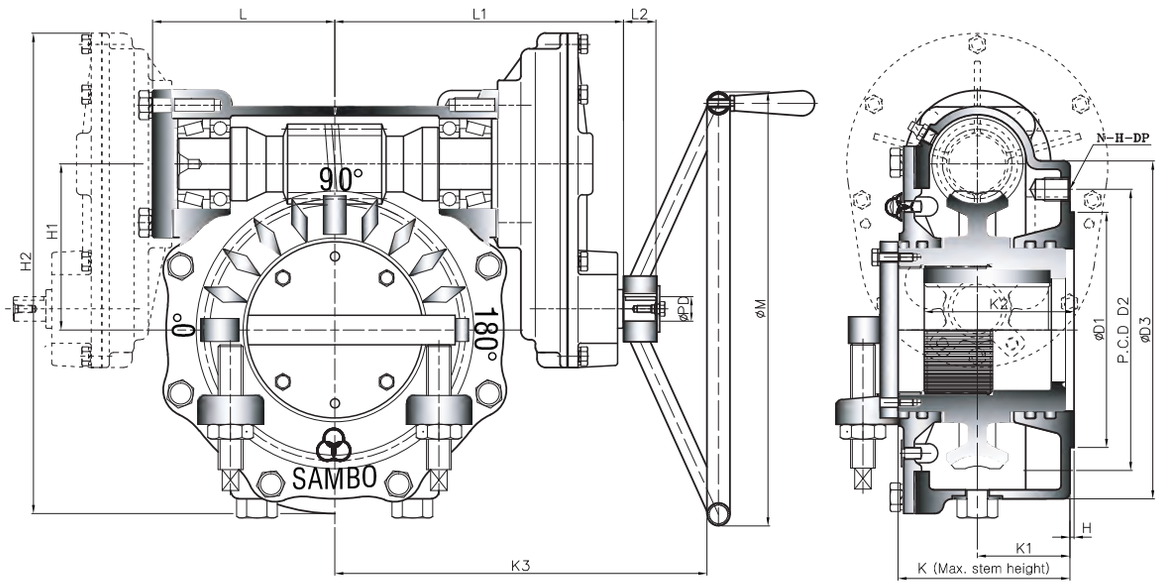

• Pin hole size is same as tap out diameter

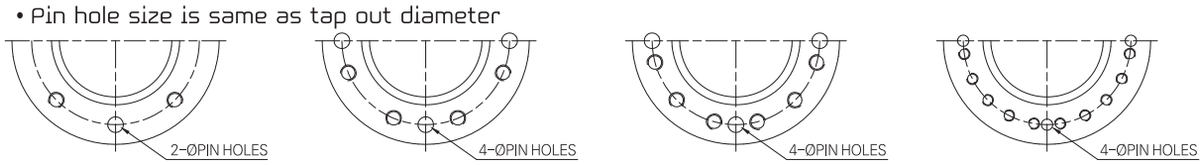

TYPE - A TYPE - B TYPE - C TYPE - D

Dimension >>>

UNIT : mm

MODEL \ DIM	BASE PART							EXTERNAL PART								INPUT SHAFT PART			HAND WHEEL
	TYPE	FLANGE	ØD1	P.C.D ØD2	P.C.D N-H-DP	ØD3	H	H1	H2	K	K1	K2	K3	L	L1	L2	ØPD	KEY	
SBWG-00-1S 180	A	F-12	85	125	4-M12-18	165	2	69.5	210	86.5	43	53.6	259	86	166	29	21	6X6	300
SBWG-01-1S 180		F-14	100	140	4-M16-24	190		82.5	235.5	96	53	65	288	95	175				400
SBWG-02-1S 180		F-16	130	165	4-M20-30	220		97	282	111.5	58	75.5	329	108	190.5	34	26	8X7	500
SBWG-03-1S 180	B	F-16 (F-20)	160	205	8-M16-24	250	3	112	312	118	61	87	349	118	200.5	34	26	8X7	560
SBWG-35-1S 180		F-25	200	254	8-M16-24	300		127	352	135	72	100	367	125	218.5				
SBWG-04-1S 180		F-25	200	254	8-M16-24	300		153	417.5	147	73	120	413	153	250	34	32	10X8	630
* SBWG-05-1S 180		F-30	230	298	8-M20-30	350		180	469.5	155	78	141	443	163	260				710
SBWG-55-1S 180						350		202	516.5	162	80	144	463	183	280				
SBWG-06-1S 180		F-35	260	356	8-M30-45	415		230	621	200	109	173	552	217	349	44	38	12X8	800
SBWG-07-1S 180		F-40	300	406	8-M36-55	475		280.5	723	227	116	209	607	252	384				900
SBWG-75-1S 180	C	F-48	370	483	12-M36-55	560	5	326	860	246	120	220	721	279	485	58	50	16X10	1000
SBWG-08-1S 180						560		379	968	254	125	245	756	314	520				
SBWG-09-1S 180	D	F-60	470	603	20-M36-55	700	5	448.5	1107.5	284	138	270	796	354	560	58	50	16X10	1000
SBWG-10-1S 180						800		513	1291	352	164	330	927	426	691				
SBWG-11-1S 180						900		616.5	1499.5	394	181	370	969.5	468.5	733.5				
* SBWG-12-1S 180		F-80	670	813	20-M42-63	1000		711	1751	482	265	415	1140	554	905				
* SBWG-13-1S 180						1000		809	1944	546	301	515	1190	609	955				

Size and component specification in this catalogue are subject to change without prior notice for quality improvement.
* Mark has been changed and updated.

Feature >>>

- All mounting bases conform to ISO 5210/1 standards.
- All castings are ductile iron, Class 65-45-12 excellent strength and impact resistance.
- Worm gear material is available in two option.
  - Ductile iron,Class 80-55-06
  - Aluminum bronze, B148-C95800
- Worm is 1045 heat treated Carbon steel.
- Removable splined bushing to permit accurate positioning between gear drive and valve stem.
- Options include hand wheels, chain and etc.

Global Leader SAMBO SPIRAL BEVEL GEAR ACTUATORS

The World's Highest Quality!

Bushing Type

Splines permit accurate alignment of valve stem key.

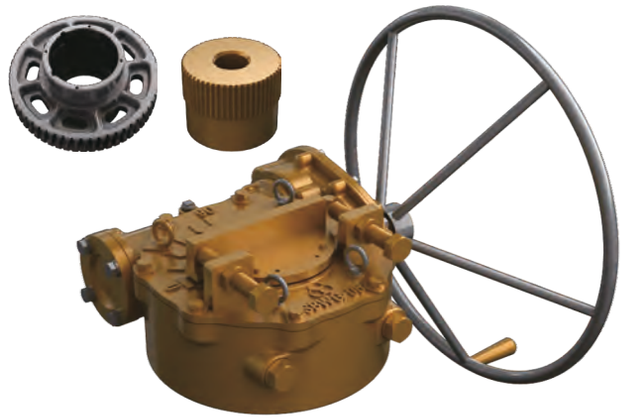

M·O·V OPTION

Worm Gear can be provided with Motor actuator input flanges to accept standard ISO Mounting Base.

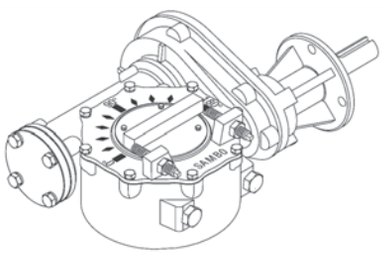

LOCKING DEVICE OPTION

Input can be equipped with a Handwheel locking device for Manually operated units.

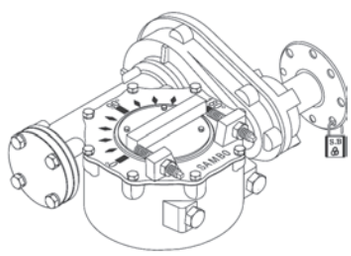

Selection Chart for Manual Operation >>>

SIZE / MODEL	GEAR RATIO	MAX. STEM ACCEPTANCE	BASE MOUNTING OPTION & STANDARD	MAX. TORQUE CAPACITY		WEIGHT
				N–m	Ft . lbf	Kg
SBWG–00–1S 180	80 : 1	36 (10X8)	F–10 , F–12	1200	885	15
SBWG–01–1S 180	88 : 1	46 (14X9)	F–10 , F–12 , F–14	2000	1475	18
SBWG–02–1S 180	121.6 : 1	60 (18X11)	F–12 , F–14 , F–16	2800	2065	27
SBWG–03–1S 180	131.7 : 1	75 (20X12)	F–14 , F–16 , (F–20)	4300	3172	37
SBWG–35–1S 180	131.7 : 1	80 (22X14)	F–16 , (F–20), F–25	6100	4499	51
SBWG–04–1S 180	168 : 1	95 (25X14)	F–16 , (F–20) , F–25	10400	7671	71
* SBWG–05–1S 180	180 : 1	115 (32X18)	(F–20), F–25 , F–30	15900	11727	94
SBWG–55–1S 180	186 : 1	125 (32X18)	F–25 , F–30	23500	17333	115
SBWG–06–1S 180	256 : 1	140 (36X20)	F–25 , F–30 , F–35	32800	24192	185
SBWG–07–1S 180	272 : 1	180 (45X25)	F–30 , F–35 , F–40	51100	37689	282
SBWG–75–1S 180	330 : 1	210 (50X28)	F–35 , F–40 , F–48	81500	60111	436
SBWG–08–1S 180	330 : 1	250 (56X32)	F–40 , F–48	121000	89245	561
SBWG–09–1S 180	330 : 1	280 (63X32)	F–48 , F–60	192500	141981	920
SBWG–10–1S 180	320 : 1	320 (70X36)	F–60	275000	202830	1444
SBWG–11–1S 180	340 : 1	360 (80X40)	F–60	442000	326002	2202
* SBWG–12–1S 180	350 : 1	400 (90X45)	F–60 , (F–80)	610000	449913	3103
* SBWG–13–1S 180	360 : 1	420 (100X50)	F–60 , (F–80)	970000	715435	4005

Size and component specification in this catalogue are subject to change without prior notice for quality improvement.
* Mark has been changed and updated.

PART TURN 180°

Horizontal Input with Double Reduction Gear Attachment

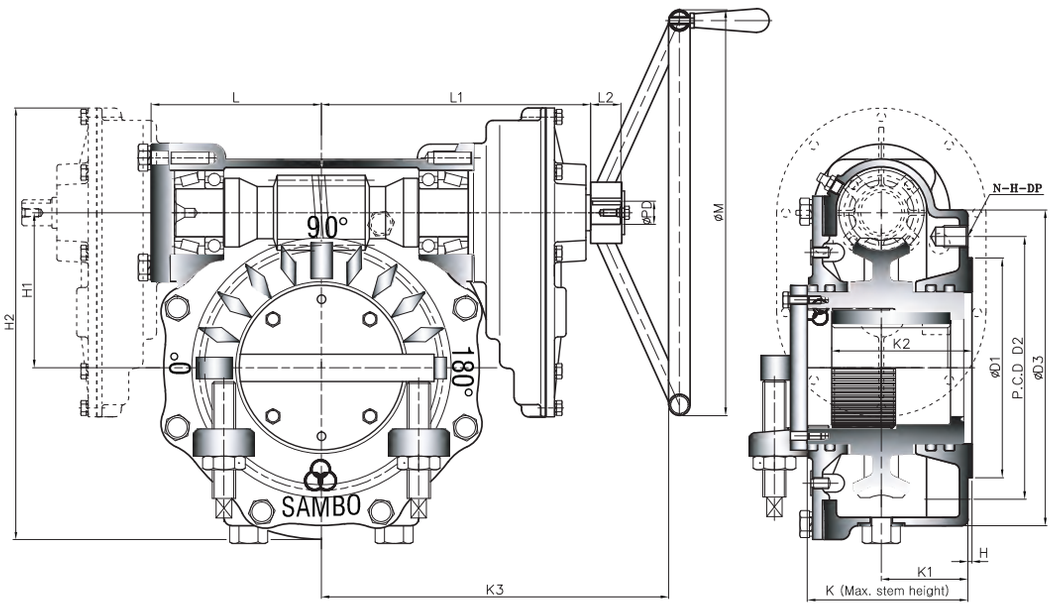

• Pin hole size is same as tap out diameter

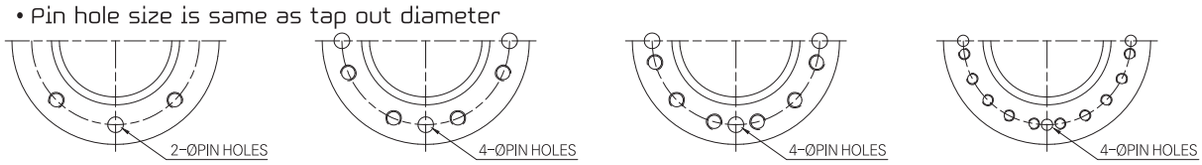

TYPE - A TYPE - B TYPE - C TYPE - D

Dimension >>>

UNIT : mm

MODEL \ DIM	BASE PART							EXTERNAL PART								INPUT SHAFT PART			HAND WHEEL
	TYPE	FLANGE	ØD1	P.C.D ØD2	P.C.D N-H-DP	ØD3	H	H1	H2	K	K1	K2	K3	L	L1	L2	ØPD	KEY	
SBWG-00-1SD 180	A	F-12	85	125	4-M12-18	165	2	69.5	210	86.5	43	53.6	276	86	183	29	21	6X6	300
SBWG-01-1SD 180		F-14	100	140	4-M16-24	190		82.5	235.5	96	53	65	305	95	192				400
SBWG-02-1SD 180		F-16	130	165	4-M20-30	220		97	282	111.5	58	75.5	343	108	214.5	34	26	8X7	500
SBWG-03-1SD 180	B	F-16 (F-20)	160	205	8-M16-24	250	3	112	312	118	61	87	373	118	224.5	34	26	8X7	560
SBWG-35-1SD 180		F-25	200	254	8-M16-24	300		127	352	135	72	100	385	125	236.5				
SBWG-04-1SD 180		F-25	200	254	8-M16-24	300		153	417.5	147	73	120	449	153	286	34	32	10X8	630
* SBWG-05-1SD 180		F-30	230	298	8-M20-30	350		180	469.5	155	78	141	479	163	296				710
SBWG-55-1SD 180						350		202	516.5	162	80	144	499	183	316				
SBWG-06-1SD 180		F-35	260	356	8-M30-45	415		230	621	200	109	173	579	217	376	44	38	12X8	800
SBWG-07-1SD 180		F-40	300	406	8-M36-55	475		280.5	723	227	116	209	634	252	411				900
SBWG-75-1SD 180	C	F-48	370	483	12-M36-55	560	5	326	860	246	120	220	767	279	531	58	50	16X10	1000
SBWG-08-1SD 180						560		379	968	254	125	245	802	314	566				
SBWG-09-1SD 180	D	F-60	470	603	20-M36-55	700	5	448.5	1107.5	284	138	270	842	354	606	58	50	16X10	1000
SBWG-10-1SD 180						800		513	1291	352	164	330	982	426	746				
SBWG-11-1SD 180						900		616.5	1499.5	394	181	370	1039.5	468.5	788.5				
* SBWG-12-1SD 180		F-80	670	813	20-M42-63	1000		711	1751	482	265	415	1205	554	969				
* SBWG-13-1SD 180						1000		809	1944	546	301	515	1245	609	1009				

Size and component specification in this catalogue are subject to change without prior notice for quality improvement.
* Mark has been changed and updated.

Feature >>>

- All mounting bases conform to ISO 5210/1 standards.
- All castings are ductile iron, Class 65-45-12 excellent strength and impact resistance.
- Worm gear material is available in two option.
  - Ductile iron,Class 80-55-06
  - Aluminum bronze, B148-C95800
- Worm is 1045 heat treated Carbon steel.
- Removable splined bushing to permit accurate positioning between gear drive and valve stem.
- Options include hand wheels, chain and etc.

Global Leader SAMBO SPIRAL BEVEL GEAR ACTUATORS

The World's Highest Quality!

Bushing Type

Splines permit accurate alignment of valve stem key.

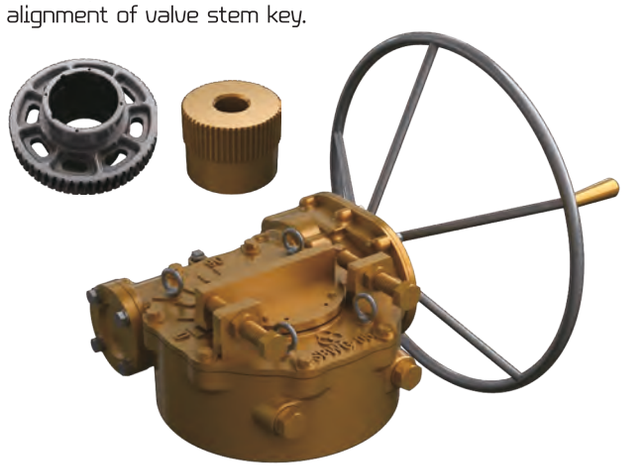

M·O·V OPTION

Worm Gear can be provided with Motor actuator input flanges to accept standard ISO Mounting Base.

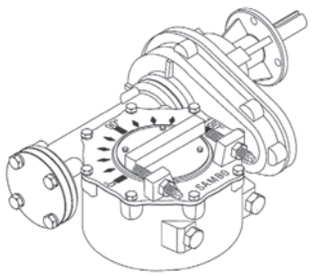

LOCKING DEVICE OPTION

Input can be equipped with a Handwheel locking device for Manually operated units.

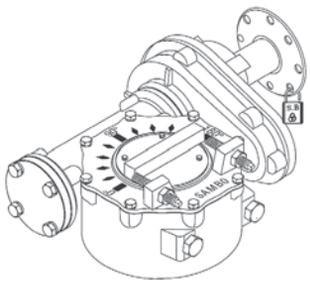

Selection Chart for Manual Operation >>>

SIZE / MODEL	MAX. GEAR RATIO (Changeable)	MAX. STEM ACCEPTANCE	BASE MOUNTING OPTION & STANDARD	MAX. TORQUE CAPACITY		WEIGHT
				N–m	Ft . lbf	Kg
SBWG–00–1SD 180	160 : 1	36 (10X8)	F–10 , F–12	1200	885	17
SBWG–01–1SD 180	176 : 1	46 (14X9)	F–10 , F–12 , F–14	2000	1475	20
SBWG–02–1SD 180	308 : 1	60 (18X11)	F–12 , F–14 , F–16	2800	2065	30
SBWG–03–1SD 180	333.7 : 1	75 (20X12)	F–14 , F–16 , (F–20)	4300	3172	39
SBWG–35–1SD 180	333.7 : 1	80 (22X14)	F–16 , (F–20) , F–25	6100	4499	53
SBWG–04–1SD 180	504 : 1	95 (25X14)	F–16 , (F–20) , F–25	10400	7671	76
* SBWG–05–1SD 180	540 : 1	115 (32X18)	(F–20), F–25 , F–30	15900	11727	99
SBWG–55–1SD 180	558 : 1	125 (32X18)	F–25 , F–30	23500	17333	120
SBWG–06–1SD 180	1024 : 1	140 (36X20)	F–25 , F–30 , F–35	32800	24192	198
SBWG–07–1SD 180	1088 : 1	180 (45X25)	F–30 , F–35 , F–40	51100	37689	296
SBWG–75–1SD 180	1650 : 1	210 (50X28)	F–35 , F–40 , F–48	81500	60111	464
SBWG–08–1SD 180	1650 : 1	250 (56X32)	F–40 , F–48	121000	89245	589
SBWG–09–1SD 180	1650 : 1	280 (63X32)	F–48 , F–60	192500	141981	947
SBWG–10–1SD 180	1600 : 1	320 (70X36)	F–60	275000	202830	1482
SBWG–11–1SD 180	1700 : 1	360 (80X40)	F–60	442000	326002	2240
* SBWG–12–1SD 180	1750 : 1	400 (90X45)	F–60 , (F–80)	610000	449913	3103
* SBWG–13–1SD 180	1800 : 1	420 (100X50)	F–60 , (F–80)	970000	715435	4005

Size and component specification in this catalogue are subject to change without prior notice for quality improvement.
* Mark has been changed and updated.

PART TURN 45°90°135°180°225°270°315°360°

Traveling Nut Stop : Horizontal Input

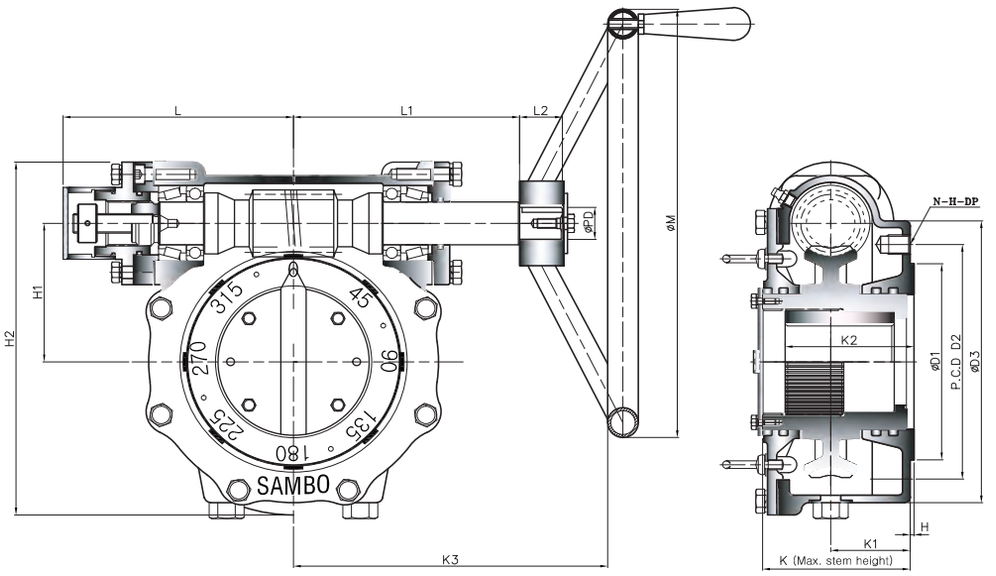

• Pin hole size is same as tap out diameter

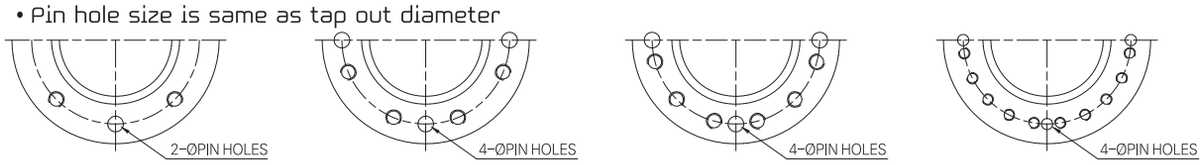

TYPE - A TYPE - B TYPE - C TYPE - D

Dimension >>>

UNIT : mm

MODEL \ DIM	BASE PART							EXTERNAL PART								INPUT SHAFT PART			HAND WHEEL
	TYPE	FLANGE	ØD1	P.C.D ØD2	P.C.D N-H-DP	ØD3	H	H1	H2	K	K1	K2	K3	L	L1	L2	ØPD	KEY	
* SBWG-BFTN	A	F-07	55	70	4-M8-12	110	2	42	132	76	38	38.6	150	145	97	24	16	6X6	200
SBWG-0TN		F-10	70	102	4-M10-15	135		57	159.5	77	38	43.6	177	152.5	104.5				250
SBWG-00TN		F-12	85	125	4-M12-18	165		69.5	192	86.5	43	53.6	230	181	138	29	21	6X6	300
SBWG-01TN		F-14	100	140	4-M16-24	190		82.5	217.5	96	53	65	260	190	147				400
SBWG-02TN		F-16	130	165	4-M20-30	220		97	257	111.5	58	75.5	294	228	166	34	26	8X7	500
SBWG-03TN	B	F-16 (F-20)	160	205	8-M16-24	250	3	112	287	118	61	87	324	238	176	34	26	8X7	560
SBWG-35TN		F-25	200	254	8-M16-24	300		127	319.5	126	63	91	329	243	194				
SBWG-04TN		F-25	200	254	8-M16-24	300		153	385.5	147	73	120	370	352	207	34	32	10X8	630
* SBWG-05TN		F-30	230	298	8-M20-30	350		180	437.5	155	78	141	400	362	217				710
SBWG-55TN						350		202	484.5	162	80	144	420	382	237				
SBWG-06TN		F-35	260	356	8-M30-45	415		230	558.5	200	109	175	489	497	286	44	38	12X8	800
SBWG-07TN		F-40	300	406	8-M36-55	475		280.5	660.5	227	116	209	538	532	320				900
SBWG-75TN	C	F-48	370	483	12-M36-55	560	5	326	776	246	120	220	617	621	381	58	50	16X10	1000
SBWG-08TN						560		379	884	254	125	245	652	656	416				
SBWG-09TN	D	F-60	470	603	20-M36-55	700	5	448.5	1023.5	284	138	270	692	696	456	58	50	16X10	1000
SBWG-10TN						800		513	1191	352	164	330	814	845	614				
SBWG-11TN						900		616.5	1399.5	400	181	370	857	886.5	657				
* SBWG-12TN		F-80	670	813	20-M42-63	1000		711	1621	484	265	455	980	1056	702				
* SBWG-13TN						1000		809	1814	546	301	515	988	1096	752				

Size and component specification in this catalogue are subject to change without prior notice for quality improvement.
* Mark has been changed and updated.

Feature >>>

- All mounting bases conform to ISO 5210/1 standards.
- All castings are ductile iron, Class 65-45-12 excellent strength and impact resistance.
- Worm gear material is available in two option.
  - Ductile iron,Class 80-55-06
  - Aluminum bronze, B148-C95800
- Worm is 1045 heat treated Carbon steel.
- Removable splined bushing to permit accurate positioning between gear drive and valve stem.
- Options include hand wheels, chain and etc.

Global Leader SAMBO SPIRAL BEVEL GEAR ACTUATORS

The World's Highest Quality!

Bushing Type

Splines permit accurate alignment of valve stem key.

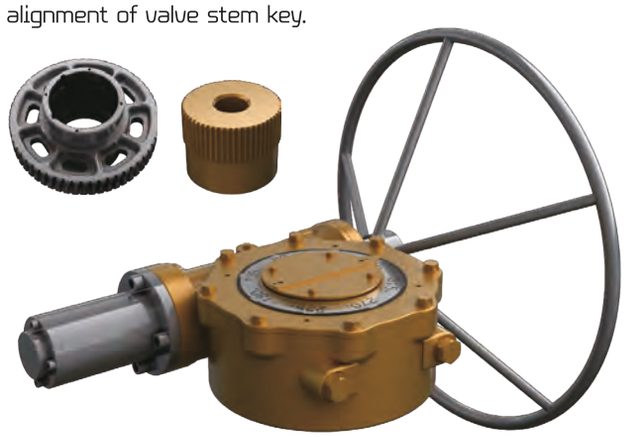

Traveling Nut Stop >>>

- If worm gear actuators are supplied on a valve, the end stops are already set.
- In case end stops need to be adjusted set end position OPEN first, if the exact end position of the valve can not be seen through a position marking at the valve shaft, the setting may have to be done with the valve removed.

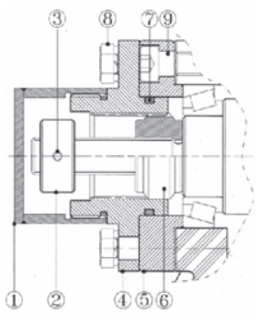

[SETTING]

- Remove all bolts⑧ at stop cover④
- Turn valve manually to end position OPEN.
- In case stop cover.④ do not correspond to the threads of the housing. Take off the stop covers.④ and place it in the required positon.
- Fit bolts⑧ withe washers and fasten them evently.
- Finally, protective cap① remove, turn stop nut② to adjust end position CLOSE.

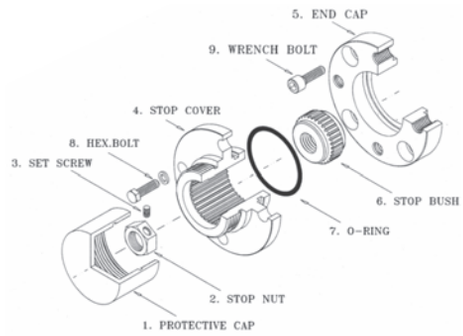

Selection Chart for Manual Operation >>>

SIZE / MODEL	GEAR RATIO	MAX. STEM ACCEPTANCE	BASE MOUNTING OPTION & STANDARD	MAX. TORQUE CAPACITY		WEIGHT
				N–m	Ft . lbf	Kg
* SBWG–BFTN	32 : 1	20 (6X6)	F–05, F–07	360	266	6
SBWG–0TN	36 : 1	28 (8X7)	F–07 , F–10	780	575	9
SBWG–00TN	40 : 1	36 (10X8)	F–10 , F–12	1200	885	13
SBWG–01TN	44 : 1	46 (14X9)	F–10 , F–12 , F–14	2000	1475	16
SBWG–02TN	48 : 1	60 (18X11)	F–12 , F–14 , F–16	2800	2065	25
SBWG–03TN	52 : 1	75 (20X12)	F–14 , F–16 , (F–20)	4300	3172	34
SBWG–35TN	52 : 1	80 (22X14)	F–16 , (F–20), F–25	6100	4499	39
SBWG–04TN	56 : 1	95 (25X14)	F–16 , (F–20) , F–25	10400	7671	63
* SBWG–05TN	60 : 1	115 (32X18)	(F–20), F–25 , F–30	15900	11727	85
SBWG–55TN	62 : 1	125 (32X18)	F–25 , F–30	23500	17333	105
SBWG–06TN	64 : 1	140 (36X20)	F–25 , F–30 , F–35	32800	24192	155
SBWG–07TN	68 : 1	180 (45X25)	F–30 , F–35 , F–40	51100	37689	254
SBWG–75TN	66 : 1	210 (50X28)	F–35 , F–40 , F–48	81500	60111	364
SBWG–08TN	66 : 1	250 (56X32)	F–40 , F–48	121000	89245	489
SBWG–09TN	66 : 1	280 (63X32)	F–48 , F–60	192500	141981	848
SBWG–10TN	64 : 1	320 (70X36)	F–60	275000	202830	1352
SBWG–11TN	68 : 1	360 (80X40)	F–60	442000	326002	2113
* SBWG–12TN	70 : 1	400 (90X45)	F–60 , (F–80)	610000	449913	2931
* SBWG–13TN	72 : 1	420 (100X50)	F–60 , (F–80)	970000	715435	3835

Size and component specification in this catalogue are subject to change without prior notice for quality improvement.
* Mark has been changed and updated.

PART TURN 45°90°135°180°225°270°315°360°

Traveling Nut Stop : Horizontal Input with Single Reduction Gear Attachment

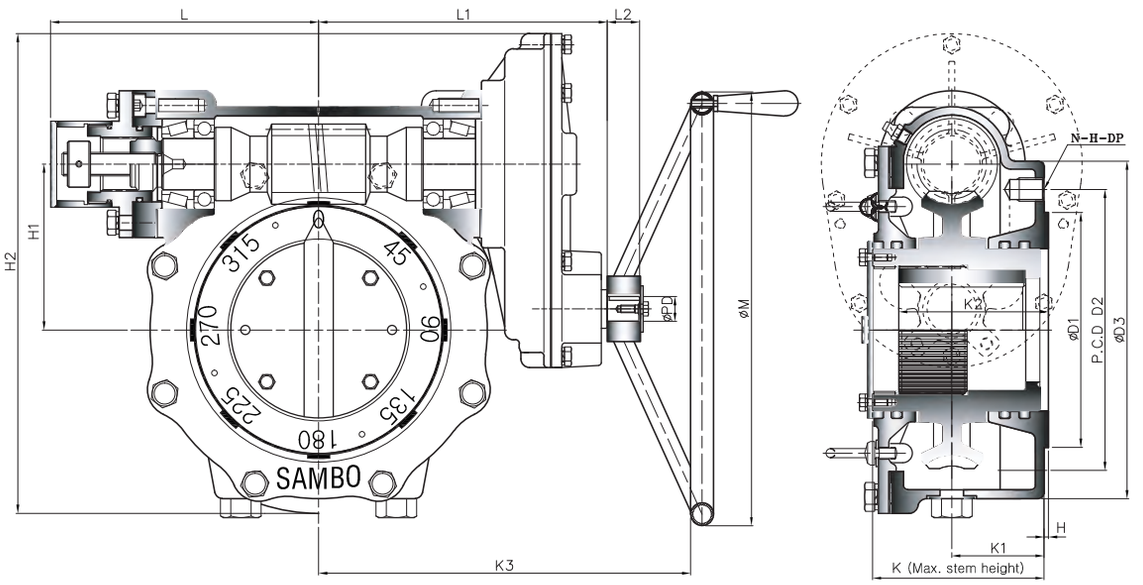

• Pin hole size is same as tap out diameter

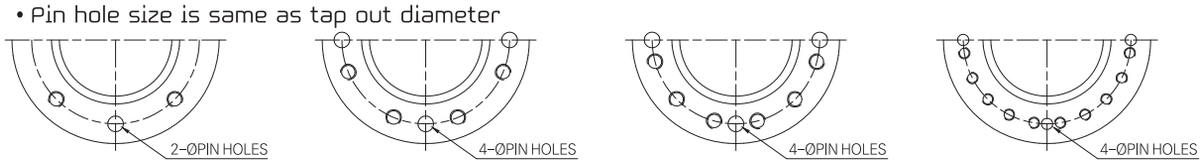

TYPE - A TYPE - B TYPE - C TYPE - D

Dimension >>>

UNIT : mm

MODEL \ DIM	BASE PART							EXTERNAL PART								INPUT SHAFT PART			HAND WHEEL
	TYPE	FLANGE	ØD1	P.C.D ØD2	P.C.D N-H-DP	ØD3	H	H1	H2	K	K1	K2	K3	L	L1	L2	ØPD	KEY	
SBWG-00TN-1S	A	F-12	85	125	4-M12-18	165	2	69.5	210	86.5	43	53.6	259	181	166	29	21	6X6	300
SBWG-01TN-1S		F-14	100	140	4-M16-24	190		82.5	235.5	96	53	65	288	190	175				400
SBWG-02TN-1S		F-16	130	165	4-M20-30	220		97	282	111.5	58	75.5	329	228	190.5	34	26	8X7	500
SBWG-03TN-1S	B	F-16 (F-20)	160	205	8-M16-24	250	3	112	312	118	61	87	349	238	200.5	34	26	8X7	560
SBWG-35TN-1S		F-25	200	254	8-M16-24	300		127	339.5	126	63	91	367	243	212.5				
SBWG-04TN-1S		F-25	200	254	8-M16-24	300		153	417.5	147	73	120	413	352	250	34	32	10X8	630
* SBWG-05TN-1S		F-30	230	298	8-M20-30	350		180	469.5	155	78	141	443	362	260				710
SBWG-55TN-1S						350		202	516.5	162	80	144	463	382	280				
SBWG-06TN-1S		F-35	260	356	8-M30-45	415		230	621	200	109	175	552	497	349	44	38	12X8	800
SBWG-07TN-1S		F-40	300	406	8-M36-55	475		280.5	723	227	116	209	607	532	384				900
SBWG-75TN-1S	C	F-48	370	483	12-M36-55	560	5	326	860	246	120	220	721	621	485	58	50	16X10	1000
SBWG-08TN-1S						560		379	968	254	125	245	756	656	520				
SBWG-09TN-1S	D	F-60	470	603	20-M36-55	700	5	448.5	1107.5	284	138	270	796	696	560	58	50	16X10	1000
SBWG-10TN-1S						800		513	1291	352	164	330	927	845	691				
SBWG-11TN-1S						900		616.5	1499.5	400	181	370	969.5	886.5	733.5				
* SBWG-12TN-1S		F-80	670	813	20-M42-63	1000		711	1751	484	265	455	1140	1056	905				
* SBWG-13TN-1S						1000		809	1944	546	301	515	1190	1096	955				

Size and component specification in this catalogue are subject to change without prior notice for quality improvement.
* Mark has been changed and updated.

Feature >>>

- All mounting bases conform to ISO 5210/1 standards.
- All castings are ductile iron, Class 65-45-12 excellent strength and impact resistance.
- Worm gear material is available in two option.
  - Ductile iron,Class 80-55-06
  - Aluminum bronze, B148-C95800
- Worm is 1045 heat treated Carbon steel.
- Removable splined bushing to permit accurate positioning between gear drive and valve stem.
- Options include hand wheels, chain and etc.

Global Leader SAMBO SPIRAL BEVEL GEAR ACTUATORS

The World's Highest Quality!

Bushing Type

Splines permit accurate alignment of valve stem key.

Traveling Nut Stop >>>

- If worm gear actuators are supplied on a valve, the end stops are already set.
- In case end stops need to be adjusted set end position OPEN first, if the exact end position of the valve can not be seen through a position marking at the valve shaft, the setting may have to be done with the valve removed.

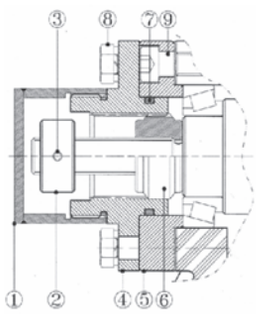

[SETTING]

- Remove all bolts⑧ at stop cover④
- Turn valve manually to end position OPEN.
- In case stop cover.④ do not correspond to the threads of the housing. Take off the stop covers.④ and place it in the required positon.
- Fit bolts⑧ withe washers and fasten them evently.
- Finally, protective cap① remove, turn stop nut② to adjust end position CLOSE.

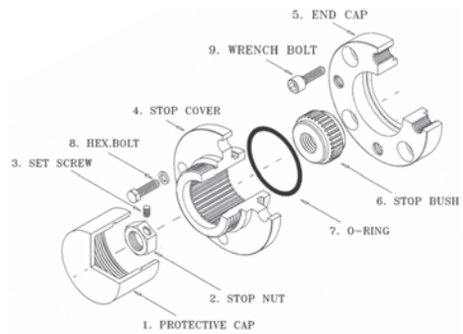

Selection Chart for Manual Operation >>>

SIZE / MODEL	GEAR RATIO	MAX. STEM ACCEPTANCE	BASE MOUNTING OPTION & STANDARD	MAX. TORQUE CAPACITY		WEIGHT
				N–m	Ft . lbf	Kg
SBWG–00TN–1S	80 : 1	36 (10X8)	F–10 , F–12	1200	885	15
SBWG–01TN–1S	88 : 1	46 (14X9)	F–10 , F–12 , F–14	2000	1475	18
SBWG–02TN–1S	121.6 : 1	60 (18X11)	F–12 , F–14 , F–16	2800	2065	29
SBWG–03TN–1S	131.7 : 1	75 (20X12)	F–14 , F–16 , (F–20)	4300	3172	38
SBWG–35TN–1S	131.7 : 1	80 (22X14)	F–16 , (F–20) , F–25	6100	4499	43
SBWG–04TN–1S	168 : 1	95 (25X14)	F–16 , (F–20) , F–25	10400	7671	73
* SBWG–05TN–1S	180 : 1	115 (32X18)	(F–20), F–25 , F–30	15900	11727	95
SBWG–55TN–1S	186 : 1	125 (32X18)	F–25 , F–30	23500	17333	115
SBWG–06TN–1S	256 : 1	140 (36X20)	F–25 , F–30 , F–35	32800	24192	183
SBWG–07TN–1S	272 : 1	180 (45X25)	F–30 , F–35 , F–40	51100	37689	283
SBWG–75TN–1S	330 : 1	210 (50X28)	F–35 , F–40 , F–48	81500	60111	436
SBWG–08TN–1S	330 : 1	250 (56X32)	F–40 , F–48	121000	89245	561
SBWG–09TN–1S	330 : 1	280 (63X32)	F–48 , F–60	192500	141981	920
SBWG–10TN–1S	320 : 1	320 (70X36)	F–60	275000	202830	1449
SBWG–11TN–1S	340 : 1	360 (80X40)	F–60	442000	326002	2210
* SBWG–12TN–1S	350 : 1	400 (90X45)	F–60 , (F–80)	610000	449913	3110
* SBWG–13TN–1S	360 : 1	420 (100X50)	F–60 , (F–80)	970000	715435	4015

Size and component specification in this catalogue are subject to change without prior notice for quality improvement.
* Mark has been changed and updated.

PART TURN 45°90°135°180°225°270°315°360°

Traveling Nut Stop : Horizontal Input with Double Reduction Gear Attachment

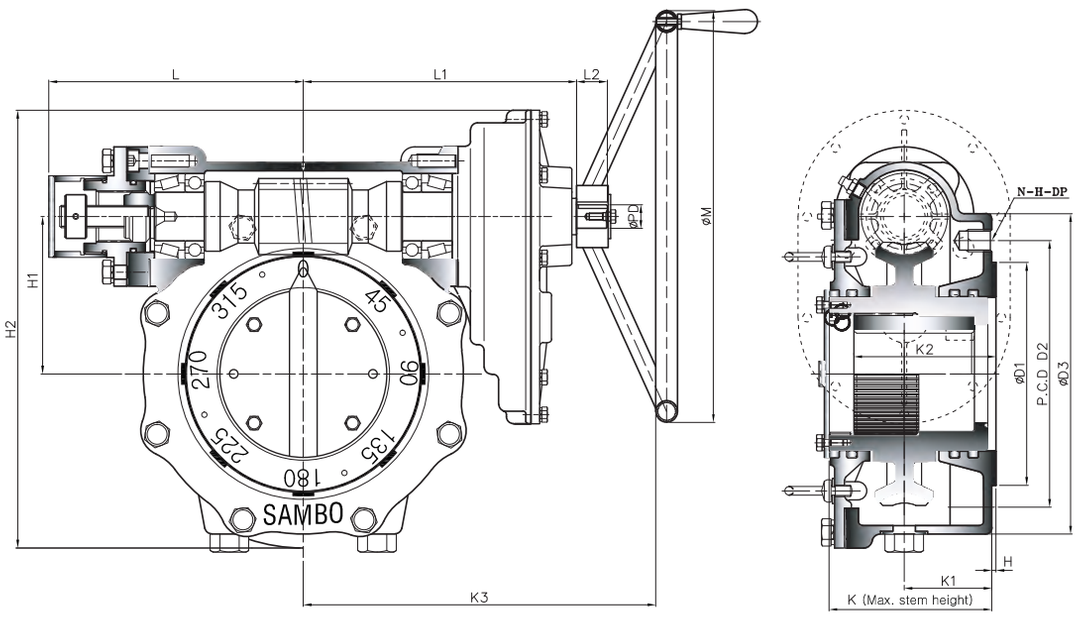

• Pin hole size is same as tap out diameter

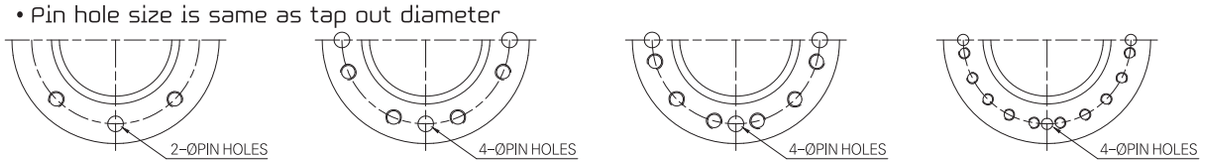

TYPE - A TYPE - B TYPE - C TYPE - D

Dimension >>>

UNIT : mm

MODEL \ DIM	BASE PART							EXTERNAL PART								INPUT SHAFT PART			HAND WHEEL
	TYPE	FLANGE	ØD1	P.C.D ØD2	P.C.D N-H-DP	ØD3	H	H1	H2	K	K1	K2	K3	L	L1	L2	ØPD	KEY	
SBWG-00TN-1SD	A	F-12	85	125	4-M12-18	165	2	69.5	210	86.5	43	53.6	276	181	183	29	21	6X6	300
SBWG-01TN-1SD		F-14	100	140	4-M16-24	190		82.5	235.5	96	53	65	305	190	192				400
SBWG-02TN-1SD		F-16	130	165	4-M20-30	220		97	282	111.5	58	75.5	343	228	214.5	34	26	8X7	500
SBWG-03TN-1SD	B	F-16 (F-20)	160	205	8-M16-24	250	3	112	312	118	61	87	373	238	224.5	34	26	8X7	560
SBWG-35TN-1SD		F-25	200	254	8-M16-24	300		127	339.5	126	63	91	391	243	236.5				
SBWG-04TN-1SD		F-25	200	254	8-M16-24	300		153	417.5	147	73	120	449	352	286	34	32	10X8	630
* SBWG-05TN-1SD		F-30	230	298	8-M20-30	350		180	469.5	155	78	141	479	362	296				710
SBWG-55TN-1SD						350		202	516.5	162	80	144	499	382	316				
SBWG-06TN-1SD		F-35	260	356	8-M30-45	415		230	621	200	109	175	579	497	376	44	38	12X8	800
SBWG-07TN-1SD		F-40	300	406	8-M36-55	475		280.5	723	227	116	209	634	532	411				900
SBWG-75TN-1SD	C	F-48	370	483	12-M36-55	560	5	326	860	246	120	220	767	621	531	58	50	16X10	1000
SBWG-08TN-1SD						560		379	968	254	125	245	802	656	566				
SBWG-09TN-1SD	D	F-60	470	603	20-M36-55	700	5	448.5	1107.5	284	138	270	842	696	606	58	50	16X10	1000
SBWG-10TN-1SD						800		513	1291	352	164	330	982	845	746				
SBWG-11TN-1SD						900		616.5	1499.5	400	181	370	1039.5	886.5	788.5				
* SBWG-12TN-1SD		F-80	670	813	20-M42-63	1000		711	1751	484	265	455	1205	1056	969				
* SBWG-13TN-1SD						1000		809	1944	546	301	515	1245	1096	1009				

Size and component specification in this catalogue are subject to change without prior notice for quality improvement.
* Mark has been changed and updated.

Feature >>>

- All mounting bases conform to ISO 5210/1 standards.
- All castings are ductile iron, Class 65-45-12 excellent strength and impact resistance.
- Worm gear material is available in two option.
  - Ductile iron,Class 80-55-06
  - Aluminum bronze, B148-C95800
- Worm is 1045 heat treated Carbon steel.
- Removable splined bushing to permit accurate positioning between gear drive and valve stem.
- Options include hand wheels, chain and etc.

Global Leader SAMBO SPIRAL BEVEL GEAR ACTUATORS

The World's Highest Quality!

Bushing Type

Splines permit accurate alignment of valve stem key.

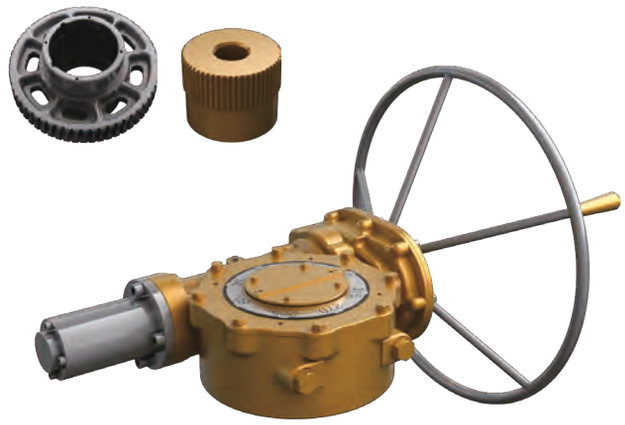

Traveling Nut Stop >>>

- If worm gear actuators are supplied on a valve, the end stops are already set.
- In case end stops need to be adjusted set end position OPEN first, if the exact end position of the valve can not be seen through a position marking at the valve shaft, the setting may have to be done with the valve removed.

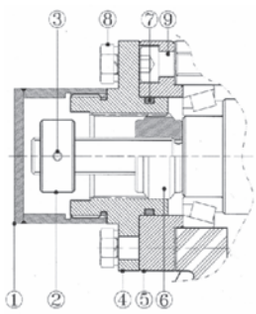

[SETTING]

- Remove all bolts⑧ at stop cover④
- Turn valve manually to end position OPEN.
- In case stop cover.④ do not correspond to the threads of the housing. Take off the stop covers.④ and place it in the required positon.
- Fit bolts⑧ withe washers and fasten them evently.
- Finally, protective cap① remove, turn stop nut② to adjust end position CLOSE.

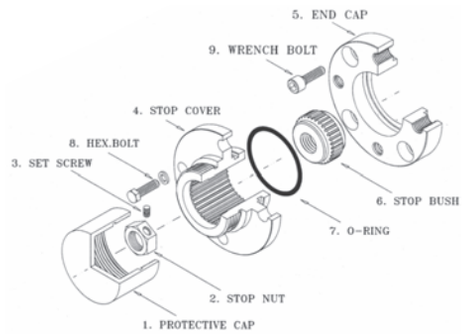

Selection Chart for Manual Operation >>>

SIZE / MODEL	MAX. GEAR RATIO (Changeable)	MAX. STEM ACCEPTANCE	BASE MOUNTING OPTION & STANDARD	MAX. TORQUE CAPACITY		WEIGHT
				N–m	Ft . lbf	Kg
SBWG–00TN–1SD	160 : 1	36 (10X8)	F–10 , F–12	1200	885	17
SBWG–01TN–1SD	176 : 1	46 (14X9)	F–10 , F–12 , F–14	2000	1475	20
SBWG–02TN–1SD	308 : 1	60 (18X11)	F–12 , F–14 , F–16	2800	2065	31
SBWG–03TN–1SD	333.7 : 1	75 (20X12)	F–14 , F–16 , (F–20)	4300	3172	40
SBWG–35TN–1SD	333.7 : 1	80 (22X14)	F–16 , (F–20), F–25	6100	4499	45
SBWG–04TN–1SD	504 : 1	95 (25X14)	F–16 , (F–20) , F–25	10400	7671	78
* SBWG–05TN–1SD	540 : 1	115 (32X18)	(F–20), F–25 , F–30	15900	11727	100
SBWG–55TN–1SD	558 : 1	125 (32X18)	F–25 , F–30	23500	17333	120
SBWG–06TN–1SD	1024 : 1	140 (36X20)	F–25 , F–30 , F–35	32800	24192	196
SBWG–07TN–1SD	1088 : 1	180 (45X25)	F–30 , F–35 , F–40	51100	37689	296
SBWG–75TN–1SD	1650 : 1	210 (50X28)	F–35 , F–40 , F–48	81500	60111	464
SBWG–08TN–1SD	1650 : 1	250 (56X32)	F–40 , F–48	121000	89245	589
SBWG–09TN–1SD	1650 : 1	280 (63X32)	F–48 , F–60	192500	141981	948
SBWG–10TN–1SD	1600 : 1	320 (70X36)	F–60	275000	202830	1487
SBWG–11TN–1SD	1700 : 1	360 (80X40)	F–60	442000	326002	2248
* SBWG–12TN–1SD	1750 : 1	400 (90X45)	F–60 , (F–80)	610000	449913	3111
* SBWG–13TN–1SD	1800 : 1	420 (100X50)	F–60 , (F–80)	970000	715435	4015

Size and component specification in this catalogue are subject to change without prior notice for quality improvement.
* Mark has been changed and updated.

MULTI TURN
Horizontal Input

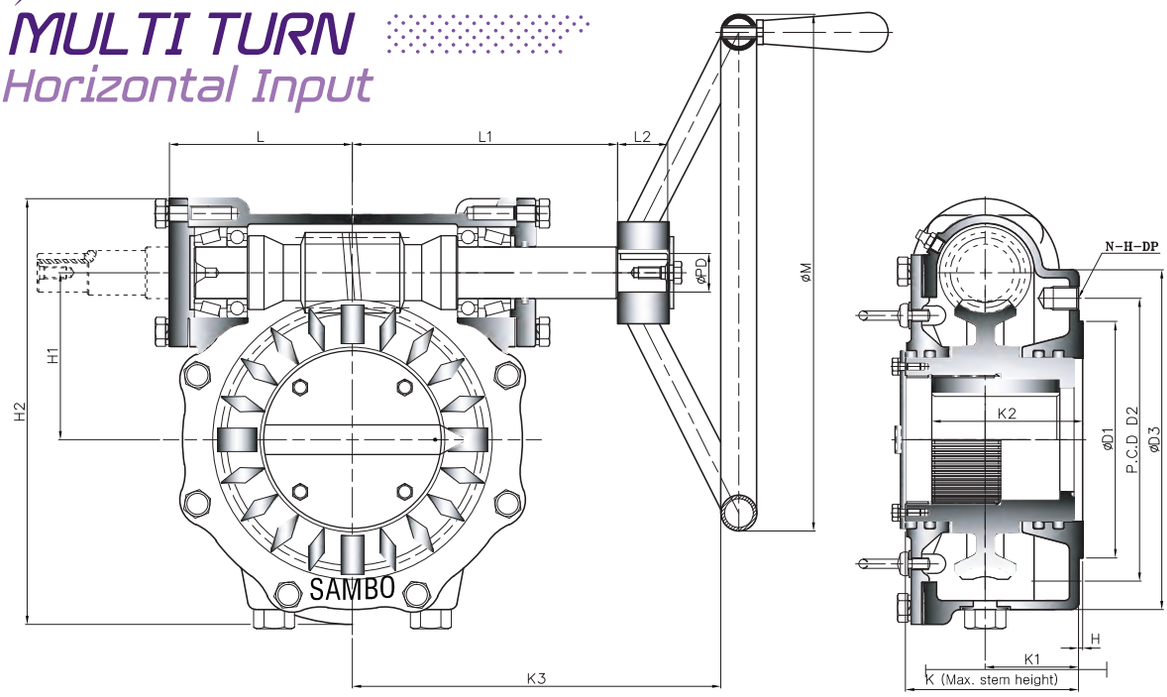

• Pin hole size is same as tap out diameter

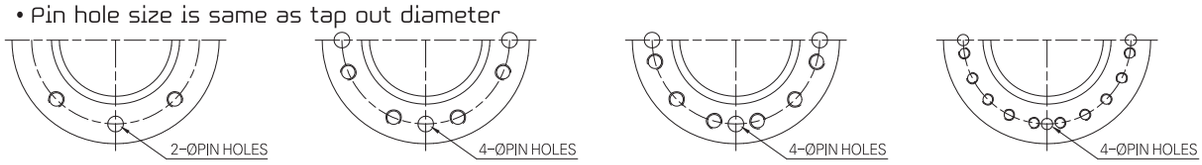

TYPE - A TYPE - B TYPE - C TYPE - D

Dimension >>>

UNIT : mm

MODEL \ DIM	BASE PART							EXTERNAL PART								INPUT SHAFT PART			HAND WHEEL
	TYPE	FLANGE	ØD1	P.C.D ØD2	P.C.D N-H-DP	ØD3	H	H1	H2	K	K1	K2	K3	L	L1	L2	ØPD	KEY	
* SBWG-BFMT	A	F-07	55	70	4-M8-12	110	2	42	132	76	38	38.6	150	64	97	24	16	6X6	200
SBWG-0MT		F-10	70	102	4-M10-15	135		57	159.5	77	38	43.6	177	71.5	104.5				250
SBWG-00MT		F-12	85	125	4-M12-18	165		69.5	192	86.5	43	53.6	230	86	138	29	21	6X6	300
SBWG-01MT		F-14	100	140	4-M16-24	190		82.5	217.5	96	53	65	260	95	147				400
SBWG-02MT		F-16	130	165	4-M20-30	220		97	257	111.5	58	75.5	294	108	166	34	26	8X7	500
SBWG-03MT	B	F-16 (F-20)	160	205	8-M16-24	250	3	112	287	118	61	87	324	118	176	34	26	8X7	560
SBWG-35MT		F-25	200	254	8-M16-24	300		127	327	135	72	100	329	125	181				
SBWG-04MT		F-25	200	254	8-M16-24	300		153	385.5	147	73	120	370	153	207	34	32	10X8	630
* SBWG-05MT		F-30	230	298	8-M20-30	350		180	437.5	155	78	141	400	163	217				710
SBWG-55MT						350		202	484.5	162	80	144	420	183	237				
SBWG-06MT		F-35	260	356	8-M30-45	415		230	558.5	200	109	173	489	217	286	44	38	12X8	800
SBWG-07MT		F-40	300	406	8-M36-55	475		280.5	660.5	227	116	209	538	252	315				900
SBWG-75MT	C	F-48	370	483	12-M36-55	560	5	326	776	246	120	220	617	279	381	58	50	16X10	1000
SBWG-08MT						560		379	884	254	125	245	652	314	416				
SBWG-09MT	D	F-60	470	603	20-M36-55	700	5	448.5	1023.5	284	138	270	692	354	456	58	50	16X10	1000
SBWG-10MT						800		513	1191	352	164	330	814	426	614				
SBWG-11MT						900		616.5	1399.5	394	181	370	857	468.5	657				
* SBWG-12MT		F-80	670	813	20-M42-63	1000		711	1621	482	265	415	980	554	702				
* SBWG-13MT						1000		809	1814	546	301	515	988	609	752				

Size and component specification in this catalogue are subject to change without prior notice for quality improvement.
* Mark has been changed and updated.

Feature >>>

- All mounting bases conform to ISO 5210/1 standards.
- All castings are ductile iron, Class 65-45-12 excellent strength and impact resistance.
- Worm gear material is available in two option.
  - Ductile iron,Class 80-55-06
  - Aluminum bronze, B148-C95800
- Worm is 1045 heat treated Carbon steel.
- Removable splined bushing to permit accurate positioning between gear drive and valve stem.
- Options include hand wheels, chain and etc.

Global Leader SAMBO SPIRAL BEVEL GEAR ACTUATORS

The World's Highest Quality!

Bushing Type

Splines permit accurate alignment of valve stem key.

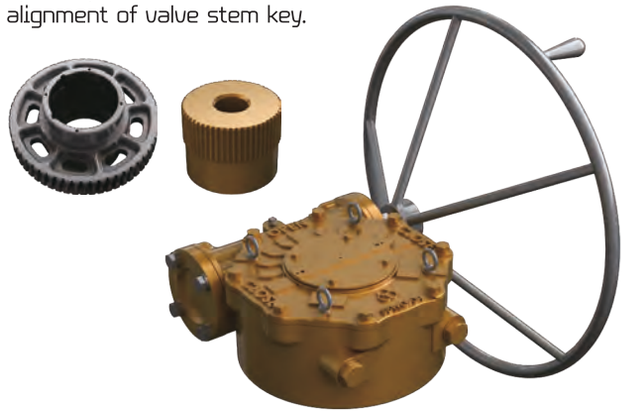

M·O·V OPTION

Worm Gear can be provided with Motor actuator input flanges to accept standard ISO Mounting Base.

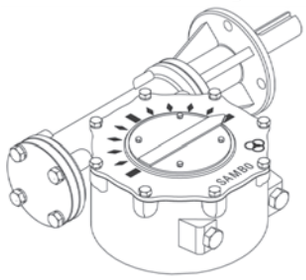

LOCKING DEVICE OPTION

Input can be equipped with a Handwheel locking device for Manually operated units.

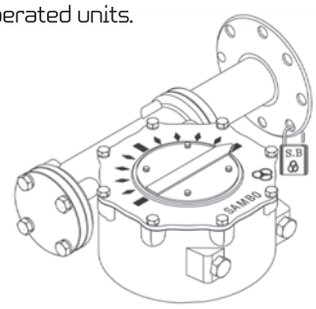

Selection Chart for Manual Operation >>>

SIZE / MODEL	GEAR RATIO	MAX. STEM ACCEPTANCE	BASE MOUNTING OPTION & STANDARD	MAX. TORQUE CAPACITY		WEIGHT
				N–m	Ft . lbf	Kg
* SBWG–BFMT	32 : 1	20 (6X6)	F–05, F–07	360	266	6
SBWG–0MT	36 : 1	28 (8X7)	F–07 , F–10	780	575	9
SBWG–00MT	40 : 1	36 (10X8)	F–10 , F–12	1200	885	13
SBWG–01MT	44 : 1	46 (14X9)	F–10 , F–12 , F–14	2000	1475	16
SBWG–02MT	48 : 1	60 (18X11)	F–12 , F–14 , F–16	2800	2065	25
SBWG–03MT	52 : 1	75 (20X12)	F–14 , F–16 , (F–20)	4300	3172	34
SBWG–35MT	52 : 1	80 (22X14)	F–16 , (F–20) , F–25	6100	4499	49
SBWG–04MT	56 : 1	95 (25X14)	F–16 , (F–20) , F–25	10400	7671	63
* SBWG–05MT	60 : 1	115 (32X18)	(F–20), F–25 , F–30	15900	11727	85
SBWG–55MT	62 : 1	125 (32X18)	F–25 , F–30	23500	17333	105
SBWG–06MT	64 : 1	140 (36X20)	F–25 , F–30 , F–35	32800	24192	155
SBWG–07MT	68 : 1	180 (45X25)	F–30 , F–35 , F–40	51100	37689	254
SBWG–75MT	66 : 1	210 (50X28)	F–35 , F–40 , F–48	81500	60111	364
SBWG–08MT	66 : 1	250 (56X32)	F–40 , F–48	121000	89245	489
SBWG–09MT	66 : 1	280 (63X32)	F–48 , F–60	192500	141981	848
SBWG–10MT	64 : 1	320 (70X36)	F–60	275000	202830	1352
SBWG–11MT	68 : 1	360 (80X40)	F–60	442000	326002	2113
* SBWG–12MT	70 : 1	400 (90X45)	F–60 , (F–80)	610000	449913	2931
* SBWG–13MT	72 : 1	420 (100X50)	F–60 , (F–80)	970000	715435	3835

Size and component specification in this catalogue are subject to change without prior notice for quality improvement.
* Mark has been changed and updated.

MULTI TURN 360°

Horizontal Input with Single Reduction Gear Attachment

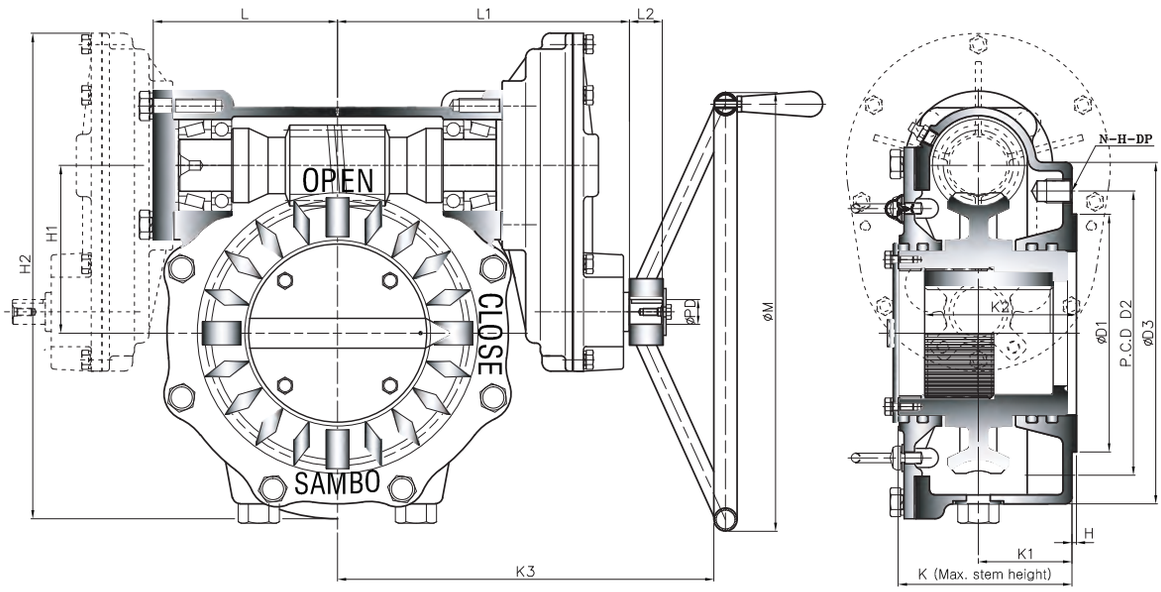

• Pin hole size is same as tap out diameter

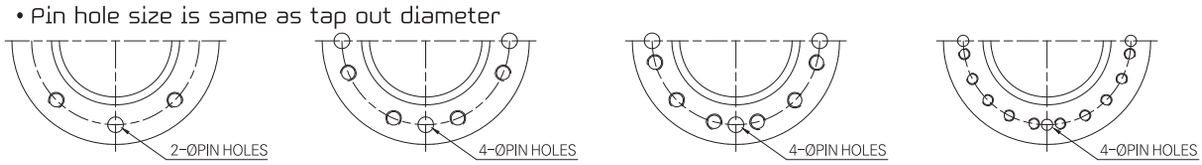

TYPE - A TYPE - B TYPE - C TYPE - D

Dimension >>>

UNIT : mm

MODEL \ DIM	BASE PART							EXTERNAL PART								INPUT SHAFT PART			HAND WHEEL
	TYPE	FLANGE	ØD1	P.C.D ØD2	P.C.D N-H-DP	ØD3	H	H1	H2	K	K1	K2	K3	L	L1	L2	ØPD	KEY	
SBWG-00MT-1S	A	F-12	85	125	4-M12-18	165	2	69.5	210	86.5	43	53.6	259	86	166	29	21	6X6	300
SBWG-01MT-1S		F-14	100	140	4-M16-24	190		82.5	235.5	96	53	65	288	95	175				400
SBWG-02MT-1S		F-16	130	165	4-M20-30	220		97	282	111.5	58	75.5	329	108	190.5	34	26	8X7	500
SBWG-03MT-1S	B	F-16 (F-20)	160	205	8-M16-24	250	3	112	312	118	61	87	349	118	200.5	34	26	8X7	560
SBWG-35MT-1S		F-25	200	254	8-M16-24	300		127	352	135	72	100	367	136	218.5				
SBWG-04MT-1S		F-25	200	254	8-M16-24	300		153	417.5	147	73	120	413	153	250	34	32	10X8	630
* SBWG-05MT-1S		F-30	230	298	8-M20-30	350		180	469.5	155	78	141	443	163	260				710
SBWG-55MT-1S						350		202	516.5	162	80	144	463	183	280				
SBWG-06MT-1S		F-35	260	356	8-M30-45	415		230	621	200	109	173	552	217	349	44	38	12X8	800
SBWG-07MT-1S		F-40	300	406	8-M36-55	475		280.5	723	227	116	209	607	252	384				900
SBWG-75MT-1S	C	F-48	370	483	12-M36-55	560	5	326	860	246	120	220	721	279	485	58	50	16X10	1000
SBWG-08MT-1S						560		379	968	254	125	245	756	314	520				
SBWG-09MT-1S	D	F-60	470	603	20-M36-55	700	5	448.5	1107.5	284	138	270	796	354	560	58	50	16X10	1000
SBWG-10MT-1S						800		513	1291	352	164	330	927	426	691				
SBWG-11MT-1S						900		616.5	1499.5	394	181	370	969.5	468.5	733.5				
* SBWG-12MT-1S		F-80	670	813	20-M42-63	1000		711	1751	482	265	415	1140	554	905				
* SBWG-13MT-1S						1000		809	1944	546	301	515	1190	609	955				

Size and component specification in this catalogue are subject to change without prior notice for quality improvement.
* Mark has been changed and updated.

Feature >>>

- All mounting bases conform to ISO 5210/1 standards.
- All castings are ductile iron, Class 65-45-12 excellent strength and impact resistance.
- Worm gear material is available in two option.
  - Ductile iron,Class 80-55-06
  - Aluminum bronze, B148-C95800
- Worm is 1045 heat treated Carbon steel.
- Removable splined bushing to permit accurate positioning between gear drive and valve stem.
- Options include hand wheels, chain and etc.

Bushing Type

Splines permit accurate alignment of valve stem key.

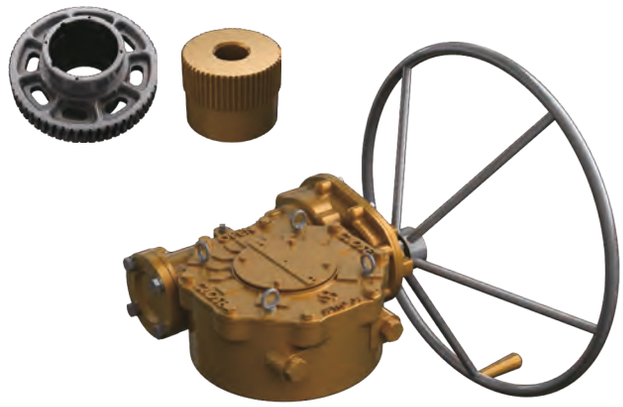

Global Leader SAMBO SPIRAL BEVEL GEAR ACTUATORS

The World's Highest Quality!

M·O·V OPTION

Worm Gear can be provided with Motor actuator input flanges to accept standard ISO Mounting Base.

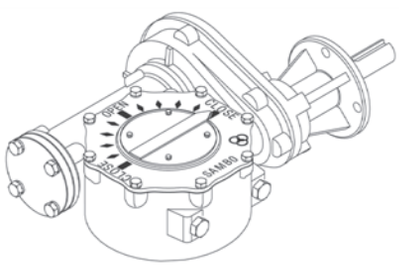

LOCKING DEVICE OPTION

Input can be equipped with a Handwheel locking device for Manually operated units.

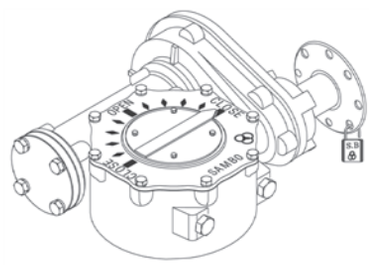

Selection Chart for Manual Operation >>>

SIZE / MODEL	GEAR RATIO	MAX. STEM ACCEPTANCE	BASE MOUNTING OPTION & STANDARD	MAX. TORQUE CAPACITY		WEIGHT
				N–m	Ft . lbf	Kg
SBWG–00MT–1S	80 : 1	36 (10X8)	F–10 , F–12	1200	885	15
SBWG–01MT–1S	88 : 1	46 (14X9)	F–10 , F–12 , F–14	2000	1475	18
SBWG–02MT–1S	121.6 : 1	60 (18X11)	F–12 , F–14 , F–16	2800	2065	29
SBWG–03MT–1S	131.7 : 1	75 (20X12)	F–14 , F–16 , (F–20)	4300	3172	38
SBWG–35MT–1S	131.7 : 1	80 (22X14)	F–16 , (F–20) , F–25	6100	4499	53
SBWG–04MT–1S	168 : 1	95 (25X14)	F–16 , (F–20) , F–25	10400	7671	73
* SBWG–05MT–1S	180 : 1	115 (32X18)	(F–20), F–25 , F–30	15900	11727	95
SBWG–55MT–1S	186 : 1	125 (32X18)	F–25 , F–30	23500	17333	115
SBWG–06MT–1S	256 : 1	140 (36X20)	F–25 , F–30 , F–35	32800	24192	183
SBWG–07MT–1S	272 : 1	180 (45X25)	F–30 , F–35 , F–40	51100	37689	283
SBWG–75MT–1S	330 : 1	210 (50X28)	F–35 , F–40 , F–48	81500	60111	436
SBWG–08MT–1S	330 : 1	250 (56X32)	F–40 , F–48	121000	89245	561
SBWG–09MT–1S	330 : 1	280 (63X32)	F–48 , F–60	192500	141981	920
SBWG–10MT–1S	320 : 1	320 (70X36)	F–60	275000	202830	1449
SBWG–11MT–1S	340 : 1	360 (80X40)	F–60	442000	326002	2210
* SBWG–12MT–1S	350 : 1	400 (90X45)	F–60 , (F–80)	610000	449913	3110
* SBWG–13MT–1S	360 : 1	420 (100X50)	F–60 , (F–80)	970000	715435	4015

Size and component specification in this catalogue are subject to change without prior notice for quality improvement.
* Mark has been changed and updated.

MULTI TURN 360°

Horizontal Input with Double Reduction Gear Attachment

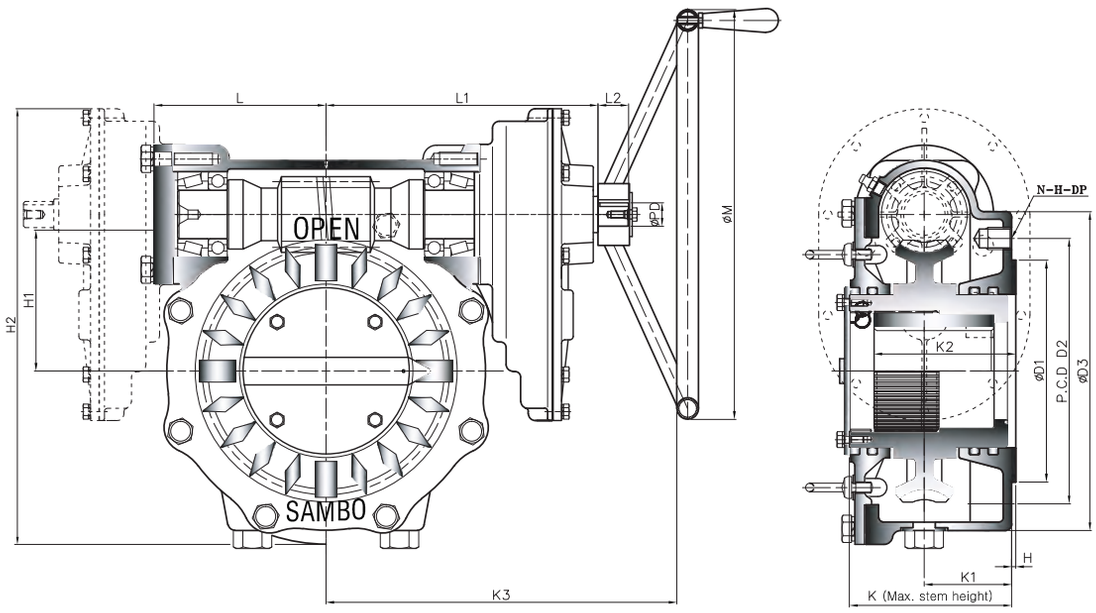

• Pin hole size is same as tap out diameter

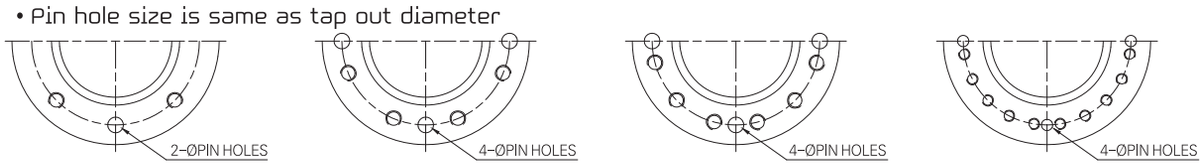

TYPE - A TYPE - B TYPE - C TYPE - D

Dimension >>>

UNIT : mm

MODEL \ DIM	BASE PART							EXTERNAL PART								INPUT SHAFT PART			HAND WHEEL
	TYPE	FLANGE	ØD1	P.C.D ØD2	P.C.D N-H-DP	ØD3	H	H1	H2	K	K1	K2	K3	L	L1	L2	ØPD	KEY	
SBWG-00MT-1SD	A	F-12	85	125	4-M12-18	165	2	69.5	210	86.5	43	53.6	276	86	183	29	21	6X6	300
SBWG-01MT-1SD		F-14	100	140	4-M16-24	190		82.5	235.5	96	53	65	305	95	192				400
SBWG-02MT-1SD		F-16	130	165	4-M20-30	220		97	282	111.5	58	75.5	343	108	214.5	34	26	8X7	500
SBWG-03MT-1SD	B	F-16 (F-20)	160	205	8-M16-24	250	3	112	312	118	61	87	373	118	224.5	34	26	8X7	560
SBWG-35MT-1SD		F-25	200	254	8-M16-24	300		127	352	135	72	100	385	125	236.5				
SBWG-04MT-1SD		F-25	200	254	8-M16-24	300		153	417.5	147	73	120	449	153	286	34	32	10X8	630
* SBWG-05MT-1SD		F-30	230	298	8-M20-30	350		180	469.5	155	78	141	479	163	296				710
SBWG-55MT-1SD						350		202	516.5	162	80	144	499	183	316				
SBWG-06MT-1SD		F-35	260	356	8-M30-45	415		230	621	200	109	173	579	217	376	44	38	12X8	800
SBWG-07MT-1SD		F-40	300	406	8-M36-55	475		280.5	723	227	116	209	634	252	411				900
SBWG-75MT-1SD	C	F-48	370	483	12-M36-55	560	5	326	860	246	120	220	767	279	531	58	50	16X10	1000
SBWG-08MT-1SD						560		379	968	254	125	245	802	314	566				
SBWG-09MT-1SD	D	F-60	470	603	20-M36-55	700	5	448.5	1107.5	284	138	270	842	354	606	58	50	16X10	1000
SBWG-10MT-1SD						800		513	1291	352	164	330	982	426	746				
SBWG-11MT-1SD						900		616.5	1499.5	394	181	370	1039.5	468.5	788.5				
* SBWG-12MT-1SD		F-80	670	813	20-M42-63	1000		711	1751	482	265	415	1205	554	969				
* SBWG-13MT-1SD						1000		809	1944	546	301	515	1245	609	1009				

Size and component specification in this catalogue are subject to change without prior notice for quality improvement.
* Mark has been changed and updated.

Feature >>>

- All mounting bases conform to ISO 5210/1 standards.
- All castings are ductile iron, Class 65-45-12 excellent strength and impact resistance.
- Worm gear material is available in two option.
  - Ductile iron,Class 80-55-06
  - Aluminum bronze, B148-C95800
- Worm is 1045 heat treated Carbon steel.
- Removable splined bushing to permit accurate positioning between gear drive and valve stem.
- Options include hand wheels, chain and etc.

Global Leader SAMBO SPIRAL BEVEL GEAR ACTUATORS

The World's Highest Quality!

Bushing Type

Splines permit accurate alignment of valve stem key.

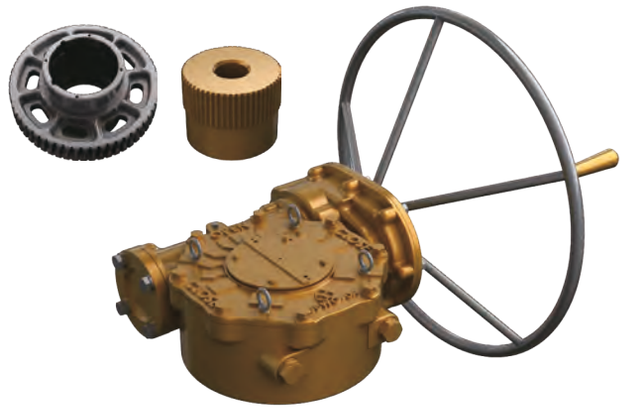

M·O·V OPTION

Worm Gear can be provided with Motor actuator input flanges to accept standard ISO Mounting Base.

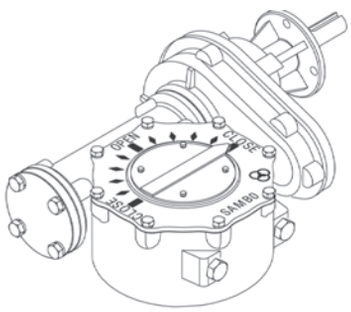

LOCKING DEVICE OPTION

Input can be equipped with a Handwheel locking device for Manually operated units.

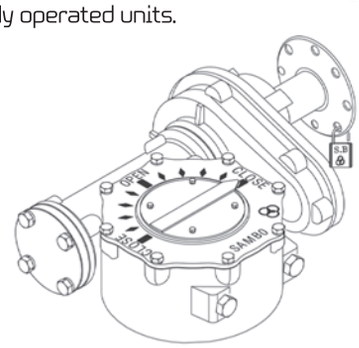

Selection Chart for Manual Operation >>>

SIZE / MODEL	MAX. GEAR RATIO (Changeable)	MAX. STEM ACCEPTANCE	BASE MOUNTING OPTION & STANDARD	MAX. TORQUE CAPACITY		WEIGHT
				N–m	Ft . lbf	Kg
SBWG–00MT–1SD	160 : 1	36 (10X8)	F–10 , F–12	1200	885	17
SBWG–01MT–1SD	176 : 1	46 (14X9)	F–10 , F–12 , F–14	2000	1475	20
SBWG–02MT–1SD	308 : 1	60 (18X11)	F–12 , F–14 , F–16	2800	2065	31
SBWG–03MT–1SD	333.7 : 1	75 (20X12)	F–14 , F–16 , (F–20)	4300	3172	40
SBWG–35MT–1SD	333.7 : 1	80 (22X14)	F–16 , (F–20) , F–25	6100	4499	55
SBWG–04MT–1SD	504 : 1	95 (25X14)	F–16 , (F–20) , F–25	10400	7671	78
* SBWG–05MT–1SD	540 : 1	115 (32X18)	(F–20), F–25 , F–30	15900	11727	100
SBWG–55MT–1SD	558 : 1	125 (32X18)	F–25 , F–30	23500	17333	120
SBWG–06MT–1SD	1024 : 1	140 (36X20)	F–25 , F–30 , F–35	32800	24192	196
SBWG–07MT–1SD	1088 : 1	180 (45X25)	F–30 , F–35 , F–40	51100	37689	296
SBWG–75MT–1SD	1650 : 1	210 (50X28)	F–35 , F–40 , F–48	81500	60111	464
SBWG–08MT–1SD	1650 : 1	250 (56X32)	F–40 , F–48	121000	89245	589
SBWG–09MT–1SD	1650 : 1	280 (63X32)	F–48 , F–60	192500	141981	948
SBWG–10MT–1SD	1600 : 1	320 (70X36)	F–60	275000	202830	1487
SBWG–11MT–1SD	1700 : 1	360 (80X40)	F–60	442000	326002	2248
* SBWG–12MT–1SD	1750 : 1	400 (90X45)	F–60 , (F–80)	610000	449913	3111
* SBWG–13MT–1SD	1800 : 1	420 (100X50)	F–60 , (F–80)	970000	715435	4015

Size and component specification in this catalogue are subject to change without prior notice for quality improvement.
* Mark has been changed and updated.

DECLUTCH GEAR

Horizontal Input

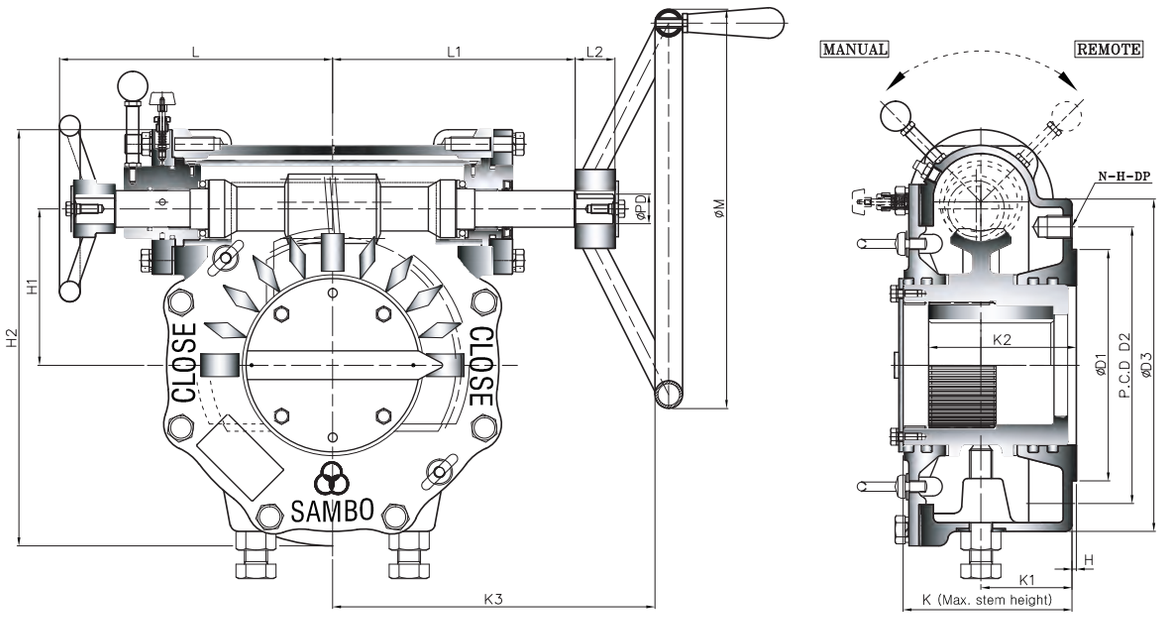

• Pin hole size is same as tap out diameter

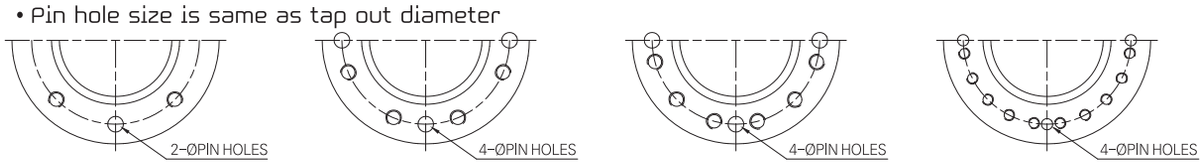

TYPE - A TYPE - B TYPE - C TYPE - D

Dimension >>>

UNIT : mm

MODEL \ DIM	BASE PART							EXTERNAL PART								INPUT SHAFT PART			HAND WHEEL
	TYPE	FLANGE	ØD1	P.C.D ØD2	P.C.D N-H-DP	ØD3	H	H1	H2	K	K1	K2	K3	L	L1	L2	ØPD	KEY	
* SBWG-BFDC	A	F-07	55	70	4-M8-12	110	2	38.5	132	76	38	38.6	150	104	97	24	16	6X6	200
SBWG-0DC		F-10	70	102	4-M10-15	135		53.5	159.5	77	38	43.6	177	111.5	106.5				250
SBWG-00DC		F-12	85	125	4-M12-18	165		69.5	198.5	90.5	43	53.6	230	122	138	29	21	6X6	300
SBWG-01DC		F-14	100	140	4-M16-24	190		83	224.5	100	53	65	260	131	147				400
SBWG-02DC		F-16	130	165	4-M20-30	220		95.5	262.5	112.5	56	75.5	274	148	139	34	26	8X7	500
SBWG-03DC	B	F-16 (F-20)	160	205	8-M16-24	250	3	109	291	118	59	87	297	158	149	34	26	8X7	560
SBWG-35DC		F-25	200	254	8-M16-24	300		127.5	340	136	72	100	342	178	194				
SBWG-04DC		F-25	200	254	8-M16-24	300		147	385.5	147	73	120	370	247	205.5	34	32	10X8	630
* SBWG-05DC		F-30	230	298	8-M20-30	350		174	437.5	155	78	141	400	257	215.5				710
SBWG-55DC						350		196	484.5	162	80	144	420	277	235.5				
SBWG-06DC		F-35	260	356	8-M30-45	415		222	558.5	200	109	175	489	316	286	44	38	12X8	800
SBWG-07DC		F-40	300	406	8-M36-55	475		272.5	660.5	227	116	209	538	350.5	315				900
SBWG-75DC	C	F-48	370	483	12-M36-55	560	5	313	776	246	120	220	617	389.5	381	58	50	16X10	1000
SBWG-08DC						560		366	884	254	125	245	652	424.5	416				
SBWG-09DC	D	F-60	470	603	20-M36-55	700	5	435.5	1023.5	284	138	270	692	465	456	58	50	16X10	1000
SBWG-10DC						800		498	1191	352	164	330	814	550	614				

Size and component specification in this catalogue are subject to change without prior notice for quality improvement.
* Mark has been changed and updated.

Feature >>>

- All mounting bases conform to ISO 5210/1 standards.
- All castings are ductile iron, Class 65-45-12 excellent strength and impact resistance.
- Worm gear material is available in two option.
  - Ductile iron,Class 80-55-06
  - Aluminum bronze, B148-C95800
- Worm is 1045 heat treated Carbon steel.
- Removable splined bushing to permit accurate positioning between gear drive and valve stem.
- Options include hand wheels, chain and etc.

Global Leader SAMBO SPIRAL BEVEL GEAR ACTUATORS

The World's Highest Quality!

Bushing Type

Splines permit accurate alignment of valve stem key.

Manual Override Operation >>>

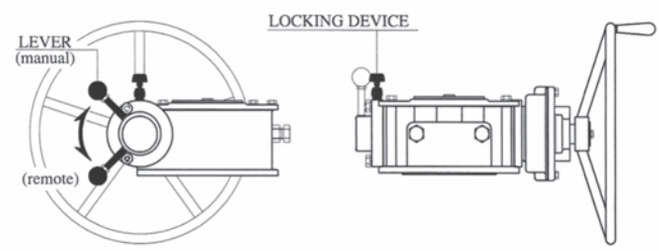

- Somewhere it should be noted that these units have been specifically developed for use with pneumatic and Hydrauric Actuators providing a positve mechanical means of manual operation.

1. Pull up on locking device knob.
2. Rotate lever to "Manual" position.
3. Handwheel can now be operated.
   Note : pneumatic actuator is now fully disengaged.
4. The lever must be placed back in "Remote" position for pneumatic operation.

CAUTION

- Operate to check the position of manual and remote.
- When convert "manual" position,control the position of worm shaft and then operate to accord with worm gear.

Selection Chart for Manual Operation >>>

SIZE / MODEL	GEAR RATIO	MAX. STEM ACCEPTANCE	BASE MOUNTING OPTION & STANDARD	MAX. TORQUE CAPACITY		WEIGHT
				N–m	Ft . lbf	Kg
* SBWG–BFDC	32 : 1	20 (6X6)	F–05, F–07	320	236	4
SBWG–0DC	36 : 1	28 (8X7)	F–07 , F–10	680	502	6
SBWG–00DC	38 : 1	36 (10X8)	F–10 , F–12	980	723	10
SBWG–01DC	43 : 1	46 (14X9)	F–10 , F–12 , F–14	1600	1180	13
SBWG–02DC	46 : 1	60 (18X11)	F–12 , F–14 , F–16	2500	1844	21
SBWG–03DC	50 : 1	75 (20X12)	F–14 , F–16 , (F–20)	3800	2803	29
SBWG–35DC	52 : 1	80 (22X14)	F–16 , (F–20) , F–25	5600	4130	43
SBWG–04DC	56 : 1	95 (25X14)	F–16 , (F–20) , F–25	9600	7081	56
* SBWG–05DC	60 : 1	115 (32X18)	(F–20), F–25 , F–30	14400	10621	78
SBWG–55DC	62 : 1	125 (32X18)	F–25 , F–30	21150	15599	97
SBWG–06DC	64 : 1	140 (36X20)	F–25 , F–30 , F–35	29520	21773	147
SBWG–07DC	68 : 1	180 (45X25)	F–30 , F–35 , F–40	45000	33190	243
SBWG–75DC	65 : 1	210 (50X28)	F–35 , F–40 , F–48	73350	54100	350
SBWG–08DC	65 : 1	250 (56X32)	F–40 , F–48	108900	80321	473
SBWG–09DC	64 : 1	280 (63X32)	F–48 , F–60	178000	131286	829
SBWG–10DC	62 : 1	320 (70X36)	F–60	253000	186600	1330

Size and component specification in this catalogue are subject to change without prior notice for quality improvement.
* Mark has been changed and updated.

DECLUTCH GEAR

Horizontal Input with Single Reduction Gear Attachment

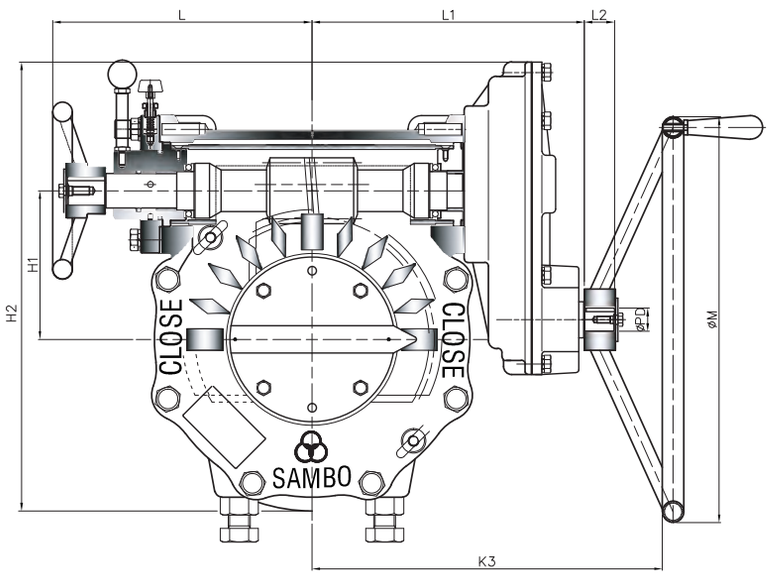

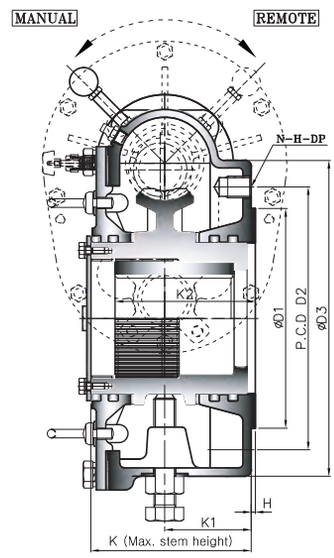

• Pin hole size is same as tap out diameter

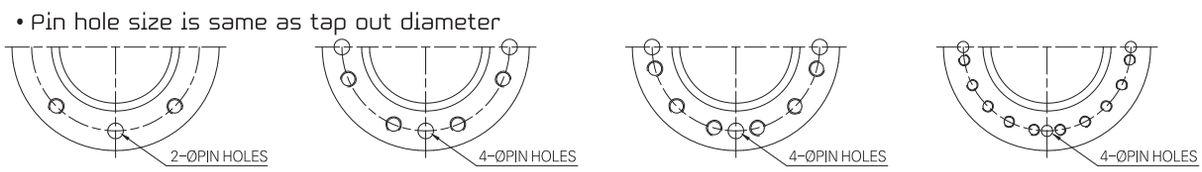

TYPE - A TYPE - B TYPE - C TYPE - D

Dimension >>>

UNIT : mm

MODEL \ DIM	BASE PART							EXTERNAL PART								INPUT SHAFT PART			HAND WHEEL
	TYPE	FLANGE	ØD1	P.C.D ØD2	P.C.D N-H-DP	ØD3	H	H1	H2	K	K1	K2	K3	L	L1	L2	ØPD	KEY	
SBWG-00DC-1S	A	F-12	85	125	4-M12-18	165	2	69.5	214	86.5	43	53.6	259	154	166	29	21	6X6	300
SBWG-01DC-1S		F-14	100	140	4-M16-24	190		83	240	96	53	65	288	163	175				400
SBWG-02DC-1S		F-16	130	165	4-M20-30	220		95.5	285	111.5	58	75.5	329	184	190.5	34	26	8X7	500
SBWG-03DC-1S	B	F-16 (F-20)	160	205	8-M16-24	250	3	109	313.5	118	61	87	349	194	200.5	34	26	8X7	560
SBWG-35DC-1S		F-25	200	254	8-M16-24	300		127.5	357.5	135	72	100	367	210	218.5				
SBWG-04DC-1S		F-25	200	254	8-M16-24	300		147	417.5	147	73	120	413	247	250	34	32	10X8	630
* SBWG-05DC-1S		F-30	230	298	8-M20-30	350		174	469.5	155	78	141	443	257	260				710
SBWG-55DC-1S						350		196	516.5	162	80	144	463	277	280				
SBWG-06DC-1S		F-35	260	356	8-M30-45	415		222	621	200	109	173	552	316	349	44	38	12X8	800
SBWG-07DC-1S		F-40	300	406	8-M36-55	475		272.5	723	227	116	209	607	350.5	384				900
SBWG-75DC-1S	C	F-48	370	483	12-M36-55	560	5	313	860	246	120	220	721	389.5	485	58	50	16X10	1000
SBWG-08DC-1S						560		366	968	254	125	245	756	424.5	520				
SBWG-09DC-1S	D	F-60	470	603	20-M36-55	700	5	435.5	1107.5	284	138	270	796	465	560	58	50	16X10	1000
SBWG-10DC-1S						800		498	1191	352	164	330	927	550	691				

Size and component specification in this catalogue are subject to change without prior notice for quality improvement.
* Mark has been changed and updated.

Feature >>>

- All mounting bases conform to ISO 5210/1 standards.
- All castings are ductile iron, Class 65-45-12 excellent strength and impact resistance.
- Worm gear material is available in two option.
  - Ductile iron,Class 80-55-06
  - Aluminum bronze, B148-C95800
- Worm is 1045 heat treated Carbon steel.
- Removable splined bushing to permit accurate positioning between gear drive and valve stem.
- Options include hand wheels, chain and etc.

Bushing Type

Splines permit accurate alignment of valve stem key.

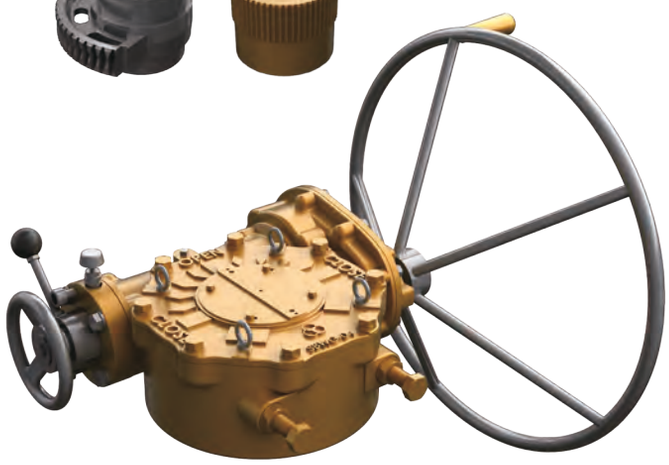

Global Leader SAMBO SPIRAL BEVEL GEAR ACTUATORS

The World's Highest Quality!

Manual Override Operation >>>

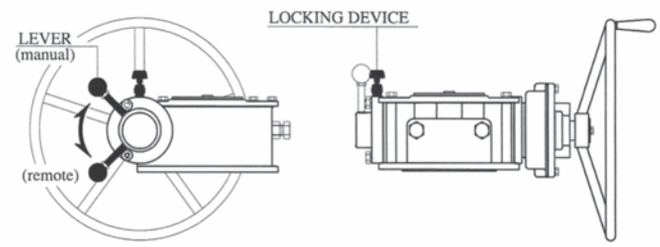

- Somewhere it should be noted that these units have been specifically developed for use with pneumatic and Hydrauric Actuators providing a positive mechanical means of manual operation.

1. Pull up on locking device knob.
2. Rotate lever to "Manual" position.
3. Handwheel can now be operated.
   Note : pneumatic actuator is now fully disengaged.
4. The lever must be placed back in "Remote" position for pneumatic operation.

CAUTION

- Operate to check the position of manual and remote.
- When convert "manual" position,control the position of worm shaft and then operate to accord with worm gear.

Selection Chart for Manual Operation >>>

SIZE / MODEL	GEAR RATIO	MAX. STEM ACCEPTANCE	BASE MOUNTING OPTION & STANDARD	MAX. TORQUE CAPACITY		WEIGHT
				N–m	Ft . lbf	Kg
SBWG–00DC–1S	67 : 1	36 (10X8)	F–10 , F–12	980	723	12
SBWG–01DC–1S	75 : 1	46 (14X9)	F–10 , F–12 , F–14	1600	1180	15
SBWG–02DC–1S	107 : 1	60 (18X11)	F–12 , F–14 , F–16	2500	1844	25
SBWG–03DC–1S	117 : 1	75 (20X12)	F–14 , F–16 , (F–20)	3800	2803	33
SBWG–35DC–1S	118 : 1	80 (22X14)	F–16 , (F–20) , F–25	5600	4130	50
SBWG–04DC–1S	149.3 : 1	95 (25X14)	F–16 , (F–20) , F–25	9600	7081	66
* SBWG–05DC–1S	160 : 1	115 (32X18)	(F–20), F–25 , F–30	14400	10621	88
SBWG–55DC–1S	165 : 1	125(32X18)	F–25 , F–30	21150	15599	107
SBWG–06DC–1S	232 : 1	140 (36X20)	F–25 , F–30 , F–35	29520	21773	175
SBWG–07DC–1S	247 : 1	180 (45X25)	F–30 , F–35 , F–40	45000	33190	271
SBWG–75DC–1S	290 : 1	210 (50X28)	F–35 , F–40 , F–48	73350	54100	422
SBWG–08DC–1S	290 : 1	250 (56X32)	F–40 , F–48	108900	80321	545
SBWG–09DC–1S	286 : 1	280 (63X32)	F–48 , F–60	178000	131286	902
SBWG–10DC–1S	277 : 1	320 (70X36)	F–60	253000	186600	1426

Size and component specification in this catalogue are subject to change without prior notice for quality improvement.
* Mark has been changed and updated.

DECLUTCH GEAR

Horizontal Input with Triple Reduction Gear Attachment

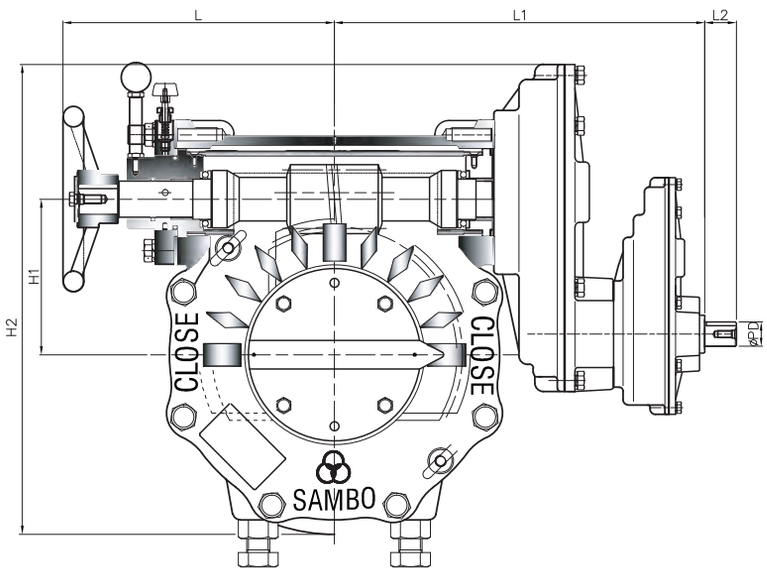

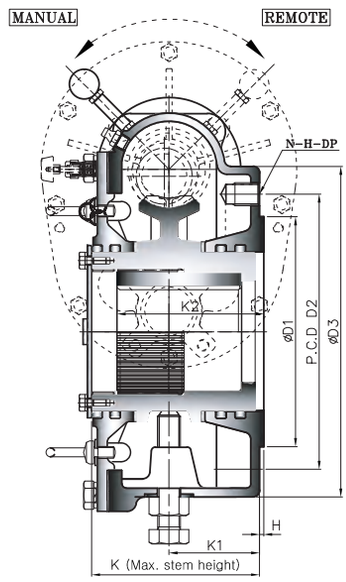

• Pin hole size is same as tap out diameter

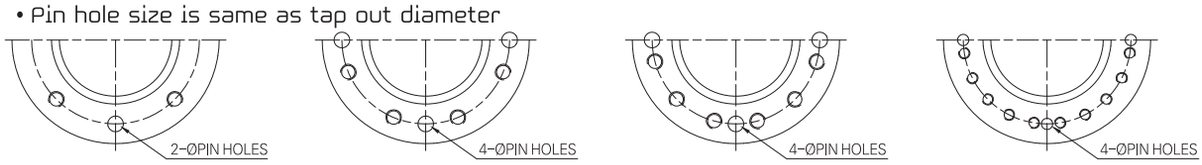

TYPE - A TYPE - B TYPE - C TYPE - D

Dimension >>>

UNIT : mm

MODEL \ DIM	BASE PART							EXTERNAL PART							INPUT SHAFT PART			HAND WHEEL
	TYPE	FLANGE	ØD1	P.C.D ØD2	P.C.D N-H-DP	ØD3	H	H1	H2	K	K1	K2	L	L1	L2	ØPD	KEY	
SBWG-00DC-2SD	A	F-12	85	125	4-M12-18	165	2	69.5	214	86.5	43	53.6	154	261	29	21	6X6	300
SBWG-01DC-2SD		F-14	100	140	4-M16-24	190		83	240	96	53	65	163	270				300
SBWG-02DC-2SD		F-16	130	165	4-M20-30	220		95.5	285	111.5	58	75.5	184	288.5	29	21	6X6	300
SBWG-03DC-2SD	B	F-16 (F-20)	160	205	8-M16-24	250	3	109	313.5	118	61	87	194	298.5	29	21	6X6	400
SBWG-35DC-2SD		F-25	200	254	8-M16-24	300		127.5	357.5	135	72	100	210	316.5				
SBWG-04DC-2SD		F-25	200	254	8-M16-24	300		147	417.5	147	73	120	247	352.5	34	26	8X7	500
* SBWG-05DC-2SD		F-30	230	298	8-M20-30	350		174	469.5	155	78	141	257	362.5				560
SBWG-55DC-2SD						350		196	516.5	162	80	144	277	382.5				
SBWG-06DC-2SD		F-35	260	356	8-M30-45	415		222	621	200	109	173	316	509	34	32	10X8	630
SBWG-07DC-2SD		F-40	300	406	8-M36-55	475		272.5	723	227	116	209	350.5	524				710
SBWG-75DC-2SD	C	F-48	370	483	12-M36-55	560	5	313	860	246	120	220	389.5	640	44	38	12X8	800
SBWG-08DC-2SD						560		366	968	254	125	245	424.5	676				900
SBWG-09DC-2SD	D	F-60	470	603	20-M36-55	700	5	435.5	1107.5	284	138	270	465	716	44	38	12X8	900
SBWG-10DC-2SD						800		498	1191	352	164	330	550	860	58	50	16X10	1000

Size and component specification in this catalogue are subject to change without prior notice for quality improvement.
* Mark has been changed and updated.

Feature >>>

- All mounting bases conform to ISO 5210/1 standards.
- All castings are ductile iron, Class 65-45-12 excellent strength and impact resistance.
- Worm gear material is available in two option.
  - Ductile iron,Class 80-55-06
  - Aluminum bronze, B148-C95800
- Worm is 1045 heat treated Carbon steel.
- Removable splined bushing to permit accurate positioning between gear drive and valve stem.
- Options include hand wheels, chain and etc.

Bushing Type

Splines permit accurate alignment of valve stem key.

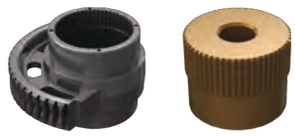

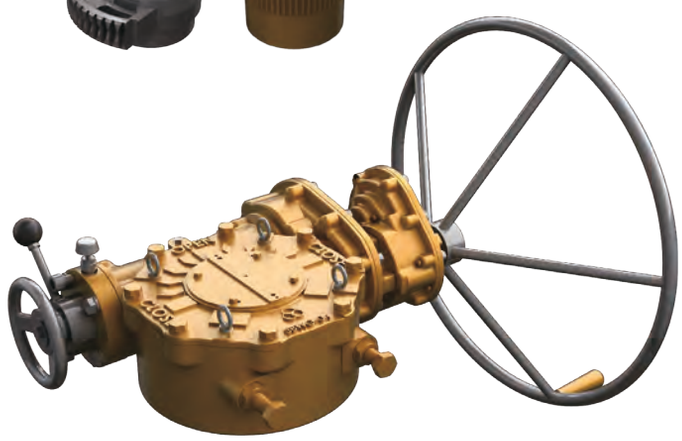

Global Leader SAMBO SPIRAL BEVEL GEAR ACTUATORS

The World's Highest Quality!

Manual Override Operation >>>

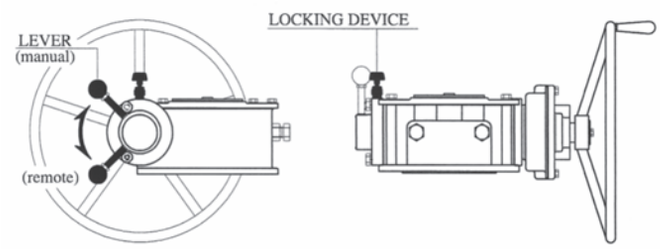

- Somewhere it should be noted that these units have been specifically developed for use with pneumatic and Hydrauric Actuators providing a positive mechanical means of manual operation.

1. Pull up on locking device knob.
2. Rotate lever to "Manual" position.
3. Handwheel can now be operated.
   Note : pneumatic actuator is now fully disengaged.
4. The lever must be placed back in "Remote" position for pneumatic operation.

CAUTION

- Operate to check the position of manual and remote.
- When convert "manual" position,control the position of worm shaft and then operate to accord with worm gear.

Selection Chart for Manual Operation >>>

SIZE / MODEL	MAX. GEAR RATIO (Changeable)	MAX. STEM ACCEPTANCE	BASE MOUNTING OPTION & STANDARD	MAX. TORQUE CAPACITY		WEIGHT
				N–m	Ft . lbf	Kg
SBWG–00DC–2SD	266 : 1	36 (10X8)	F–10 , F–12	980	723	14
SBWG–01DC–2SD	298 : 1	46 (14X9)	F–10 , F–12 , F–14	1600	1180	17
SBWG–02DC–2SD	429 : 1	60 (18X11)	F–12 , F–14 , F–16	2500	1844	27
SBWG–03DC–2SD	467 : 1	75 (20X12)	F–14 , F–16 , (F–20)	3800	2803	35
SBWG–35DC–2SD	471 : 1	80 (22X14)	F–16 , (F–20) , F–25	5600	4130	56
SBWG–04DC–2SD	958 : 1	95 (25X14)	F–16 , (F–20) , F–25	9600	7081	71
* SBWG–05DC–2SD	1026 : 1	115 (32X18)	(F–20), F–25 , F–30	14400	10621	93
SBWG–55DC–2SD	1061 : 1	125 (32X18)	F–25 , F–30	21150	15599	112
SBWG–06DC–2SD	2088 : 1	140 (36X20)	F–25 , F–30 , F–35	29520	21773	188
SBWG–07DC–2SD	2218 : 1	180 (45X25)	F–30 , F–35 , F–40	45000	33190	284
SBWG–75DC–2SD	4645 : 1	210 (50X28)	F–35 , F–40 , F–48	73350	54100	450
SBWG–08DC–2SD	4645 : 1	250 (56X32)	F–40 , F–48	108900	80321	573
SBWG–09DC–2SD	4574 : 1	280 (63X32)	F–48 , F–60	178000	131286	929
SBWG–10DC–2SD	6929.4: 1	320 (70X36)	F–60	253000	186600	1464

Size and component specification in this catalogue are subject to change without prior notice for quality improvement.
* Mark has been changed and updated.

DECLUTCH GEAR Pneumatic Actuator
Horizontal Input

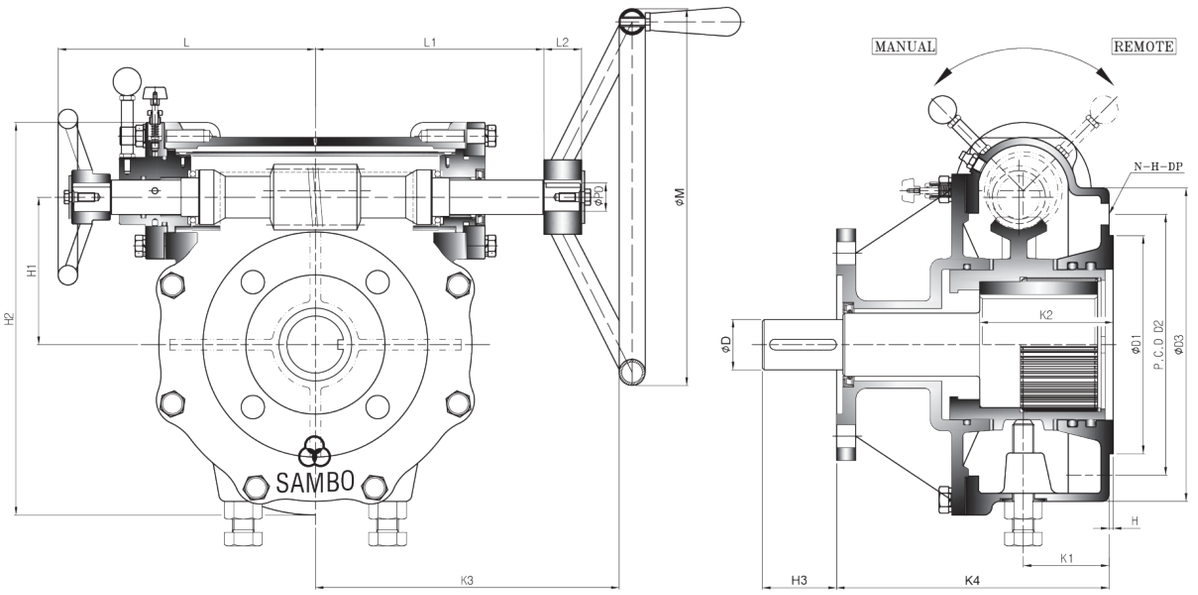

• Pin hole size is same as tap out diameter

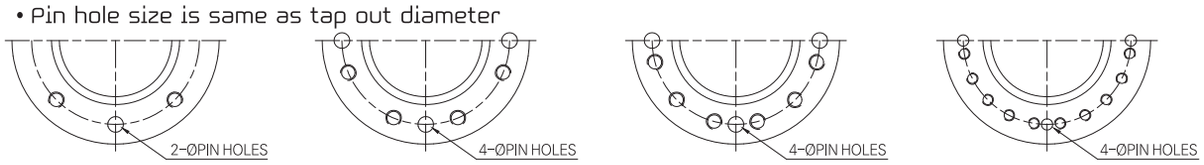

TYPE - A TYPE - B TYPE - C TYPE - D

Dimension >>>

UNIT : mm

MODEL \ DIM	BASE PART							EXTERNAL PART								INPUT SHAFT PART			HAND WHEEL
	TYPE	FLANGE	ØD1	P.C.D ØD2	P.C.D N-H-DP	ØD3	H	H1	H2	K1	K2 MAX	K3	K4	L	L1	L2	ØPD	KEY	
* SBWG-BFDCM	A	F-07	55	70	4-M8-12	110	2	38.5	132	38	50	150	131	104	97	24	16	6X6	200
* SBWG-0DCM		F-10	70	102	4-M10-15	135		53.5	159.5	38	60	177	133	111.5	106.5				250
* SBWG-00DCM		F-12	85	125	4-M12-18	165		69.5	198.5	43	70	230	149.5	122	138	29	21	6X6	300
* SBWG-01DCM		F-14	100	140	4-M16-24	190		83	224.5	53	80	260	174	131	147				400
* SBWG-02DCM		F-16	130	165	4-M20-30	220		95.5	262.5	58	90	274	191.5	148	139	34	26	8X7	500
* SBWG-03DCM	B	F-16 (F-20)	160	205	8-M16-24	250	3	109	291	61	100	297	206	158	149	34	26	8X7	560
* SBWG-35DCM		F-25	200	254	8-M16-24	300		127.5	340	72	110	342	225	178	194				
* SBWG-04DCM		F-25	200	254	8-M16-24	300		147	385.5	73	120	370	242	247	205.5	34	32	10X8	630
* SBWG-05DCM		F-30	230	298	8-M20-30	350		174	437.5	78	130	400	247.5	257	215.5				710
* SBWG-55DCM						350		196	484.5	80	170	420	256	277	235.5				
* SBWG-06DCM		F-35	260	356	8-M30-45	415		222	558.5	109	190	489	302	316	286	44	38	12X8	800
* SBWG-07DCM		F-40	300	406	8-M36-55	475		272.5	660.5	116	200	538	349	350.5	315				900
* SBWG-75DCM	C	F-48	370	483	12-M36-55	560	5	313	776	120	210	617	430	389.5	381	58	50	16X10	1000
* SBWG-08DCM						560		366	884	125	220	652	439	424.5	416				
* SBWG-09DCM	D	F-60	470	603	20-M36-55	700	5	435.5	1023.5	138	230	692	467	465	456	58	50	16X10	1000
* SBWG-10DCM						800		498	1191	352	240	814	562	550	614				

Size and component specification in this catalogue are subject to change without prior notice for quality improvement.
* Mark has been changed and updated.

Feature >>>

- All mounting bases conform to ISO 5210/1 standards.
- All castings are ductile iron, Class 65-45-12 excellent strength and impact resistance.
- Worm gear material is available in two option.
  - Ductile iron,Class 80-55-06
  - Aluminum bronze, B148-C95800
- Worm is 1045 heat treated Carbon steel.
- Removable splined bushing to permit accurate positioning between gear drive and valve stem.
- Options include hand wheels, chain and etc.

Global Leader SAMBO SPIRAL BEVEL GEAR ACTUATORS

The World's Highest Quality!

Bushing Type

Splines permit accurate alignment of valve stem key.

Manual Override Operation >>>

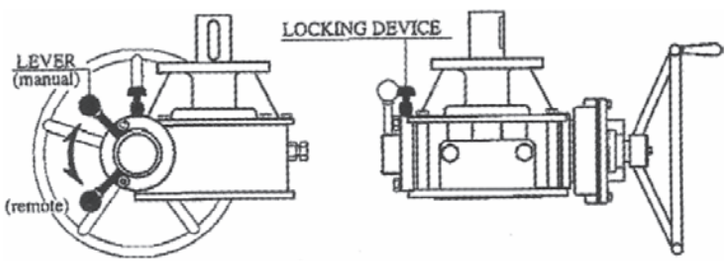

- Somewhere it should be noted that these units have been specifically developed for use with pneumatic and Hydrauric Actuators providing a positve mechanical means of manual operation.

1. Pull up on locking device knob.
2. Rotate lever to "Manual" position.
3. Handwheel can now be operated.
   Note : pneumatic actuator is now fully disengaged.
4. The lever must be placed back in "Remote" position for pneumatic operation.

CAUTION

- Operate to check the position of manual and remote.
- When convert "manual" position,control the position of worm shaft and then operate to accord with worm gear.

Selection Chart for Manual Operation >>>

SIZE / MODEL	GEAR RATIO	MAX. STEM ACCEPTANCE	BASE MOUNTING OPTION & STANDARD	PNEUMATIC PART			MAX. TORQUE CAPACITY		WEIGHT
				ØD	H3	MOUNTING OPTION	N–m	Ft . lbf	Kg
* SBWG–BFDCM	32 : 1	20 (6X6)	F–05, F–07	Ø22	50	F–05, F–07	320	236	5
* SBWG–0DCM	36 : 1	28 (8X7)	F–07 , F–10	Ø35	50	F–10, F–07	680	502	7
* SBWG–00DCM	38 : 1	36 (10X8)	F–10 , F–12	Ø45	60	F–12, F–10	980	723	11
* SBWG–01DCM	43 : 1	46 (14X9)	F–10 , F–12 , F–14	Ø55	75	F–14, F–12, F–10	1600	1180	18
* SBWG–02DCM	46 : 1	60 (18X11)	F–12 , F–14 , F–16	Ø65	90	F–16, F–14, F–12	2500	1844	29
* SBWG–03DCM	50 : 1	75 (20X12)	F–14 , F–16 , (F–20)	Ø70	90	F–16, F–14, F–12	3800	2803	45
* SBWG–35DCM	52 : 1	80 (22X14)	F–16 , (F–20) , F–25	Ø80	90	F–25, (F–20), F–16, F–14	5600	4130	63
* SBWG–04DCM	56 : 1	95 (25X14)	F–16 , (F–20) , F–25	Ø90	90	F–25, (F–20), F–16	9600	7081	86
* SBWG–05DCM	60 : 1	115 (32X18)	(F–20), F–25 , F–30	Ø110	145	F–30, F–25, (F–20)	14400	10621	120
* SBWG–55DCM	62 : 1	125 (32X18)	F–25 , F–30	Ø140	145	F–30, F–25, (F–20)	21150	15599	169
* SBWG–06DCM	64 : 1	140 (36X20)	F–25 , F–30 , F–35	Ø160	150	F–35, F–30, F–25	29520	21773	250
* SBWG–07DCM	68 : 1	180 (45X25)	F–30 , F–35 , F–40	Ø180	180	F–40, F–35, F–30, F–25	45000	33190	365
* SBWG–75DCM	65 : 1	210 (50X28)	F–35 , F–40 , F–48	Ø240	250	F–48, F–40, F–35	73350	54100	558
* SBWG–08DCM	65 : 1	250 (56X32)	F–40 , F–48	Ø250	280	F–48, F–40, F–35	108900	80321	681
* SBWG–09DCM	64 : 1	280 (63X32)	F–48 , F–60	Ø260	300	F–60, F–48	178000	131286	1038
* SBWG–10DCM	62 : 1	320 (70X36)	F–60	Ø320	340	F–60	253000	186600	1665

Size and component specification in this catalogue are subject to change without prior notice for quality improvement.
* Mark has been changed and updated.

DECLUTCH GEAR Pneumatic Actuator

Horizontal Input with Single Reduction Gear Attachment

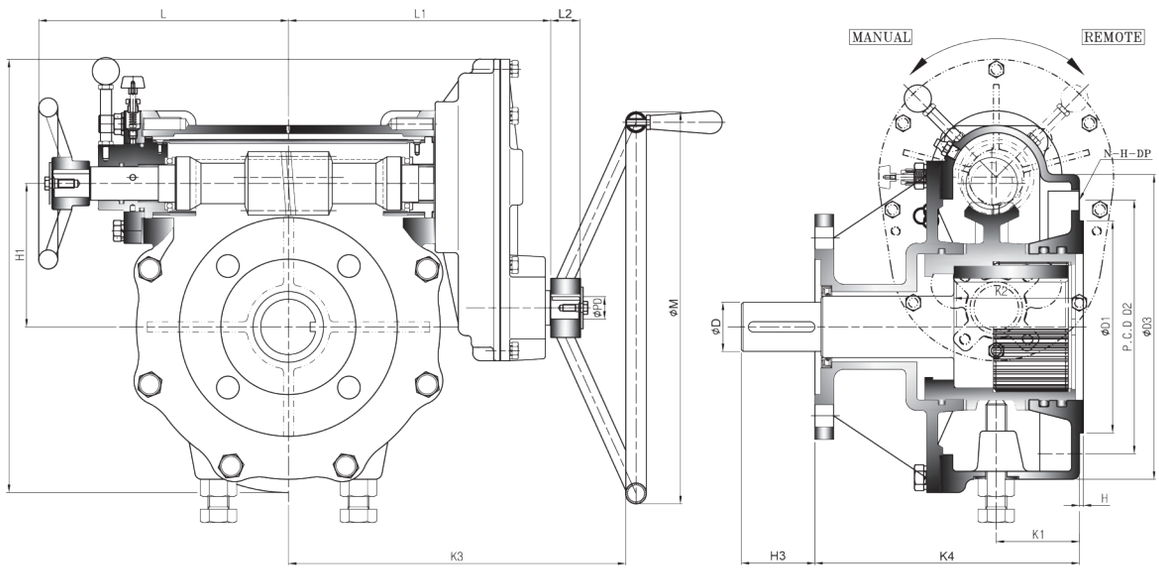

• Pin hole size is same as tap out diameter

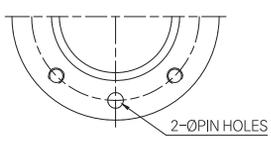

TYPE - A

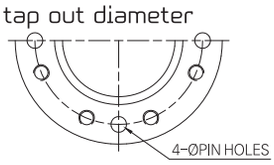

TYPE - B

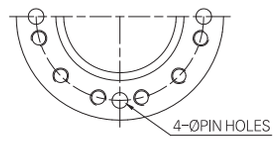

TYPE - C

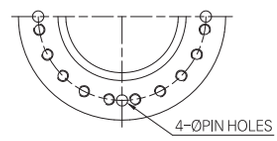

TYPE - D

Worm Gear

Dimension >>>

UNIT : mm

DIM / MODEL	BASE PART							EXTERNAL PART								INPUT SHAFT PART			HAND WHEEL
	TYPE	FLANGE	ØD1	P.C.D ØD2	P.C.D N-H-DP	ØD3	H	H1	H2	K1	K2 MAX	K3	K4	L	L1	L2	ØPD	KEY	
* SBWG-00DCM-1S	A	F-12	85	125	4-M12-18	165	2	69.5	210	43	70	259	149.5	154	166	29	21	6X6	300
* SBWG-01DCM-1S		F-14	100	140	4-M16-24	190		87	235.5	53	80	288	174	163	175				400
* SBWG-02DCM-1S		F-16	130	165	4-M20-30	220		95.5	282	58	90	329	191.5	184	190.5	34	26	8X7	500
* SBWG-03DCM-1S	B	F-16 (F-20)	160	205	8-M16-24	250	3	109	312	61	100	349	206	194	200.5	34	26	8X7	560
* SBWG-35DCM-1S		F-25	200	254	8-M16-24	300		127.5	339.5	72	110	367	225	210	218.5				
* SBWG-04DCM-1S		F-25	200	254	8-M16-24	300		147	417.5	73	120	413	242	247	250	34	32	10X8	630
* SBWG-05DCM-1S		F-30	230	298	8-M20-30	350		174	469.5	78	130	443	247.5	257	260				710
* SBWG-55DCM-1S						350		196	516.5	80	170	463	256	277	280				
* SBWG-06DCM-1S		F-35	260	356	8-M30-45	415		222	621	109	190	552	302	316	349	44	38	12X8	800
* SBWG-07DCM-1S		F-40	300	406	8-M36-55	475		272.5	723	116	200	607	349	349	384				900
* SBWG-75DCM-1S	C	F-48	370	483	12-M36-55	560	5	313	860	120	210	721	430	389.5	485	58	50	16X10	1000
* SBWG-08DCM-1S						560		366	968	125	220	756	439	424.5	520				
* SBWG-09DCM-1S	D	F-60	470	603	20-M36-55	700	5	435.5	1107.5	138	230	796	467	465	560	58	50	16X10	1000
* SBWG-10DCM-1S						800		498	1191	352	240	927	562	550	691				

Size and component specification in this catalogue are subject to change without prior notice for quality improvement.
* Mark has been changed and updated.

Feature >>>

- All mounting bases conform to ISO 5210/1 standards.
- All castings are ductile iron, Class 65-45-12 excellent strength and impact resistance.
- Worm gear material is available in two option.
  - Ductile iron,Class 80-55-06
  - Aluminum bronze, B148-C95800
- Worm is 1045 heat treated Carbon steel.
- Removable splined bushing to permit accurate positioning between gear drive and valve stem.
- Options include hand wheels, chain and etc.

Global Leader SAMBO SPIRAL BEVEL GEAR ACTUATORS

The World's Highest Quality!

Bushing Type

Splines permit accurate alignment of valve stem key.

Manual Override Operation >>>

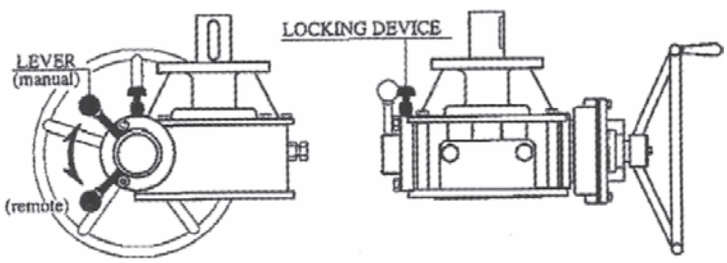

- Somewhere it should be noted that these units have been specifically developed for use with pneumatic and Hydrauric Actuators providing a positve mechanical means of manual operation.

1. Pull up on locking device knob.
2. Rotate lever to "Manual" position.
3. Handwheel can now be operated.
   Note : pneumatic actuator is now fully disengaged.
4. The lever must be placed back in "Remote" position for pneumatic operation.

CAUTION

- Operate to check the position of manual and remote.
- When convert "manual" position,control the position of worm shaft and then operate to accord with worm gear.

Selection Chart for Manual Operation >>>

SIZE / MODEL	GEAR RATIO	MAX. STEM ACCEPTANCE	BASE MOUNTING OPTION & STANDARD	PNEUMATIC PART			MAX. TORQUE CAPACITY		WEIGHT
				ØD	H3	MOUNTING OPTION	N-m	Ft . lbf	Kg
* SBWG-00DCM-1S	67 : 1	36 (10X8)	F-10 , F-12	Ø45	60	F-12, F-10	980	723	13
* SBWG-01DCM-1S	75 : 1	46 (14X9)	F-10 , F-12 , F-14	Ø55	75	F-14, F-12, F-10	1600	1180	21
* SBWG-02DCM-1S	107 : 1	60 (18X11)	F-12 , F-14 , F-16	Ø65	90	F-16, F-14, F-12	2500	1844	32
* SBWG-03DCM-1S	117 : 1	75 (20X12)	F-14 , F-16 , (F-20)	Ø70	90	F-16, F-14, F-12	3800	2803	47
* SBWG-35DCM-1S	118 : 1	80 (22X14)	F-16 , (F-20) , F-25	Ø80	90	F-25, (F-20), F-16, F-14	5600	4130	66
* SBWG-04DCM-1S	149.3 : 1	95 (25X14)	F-16 , (F-20) , F-25	Ø90	90	F-25, (F-20), F-16	9600	7081	95
* SBWG-05DCM-1S	160 : 1	115 (32X18)	(F-20), F-25 , F-30	Ø110	145	F-30, F-25, (F-20)	14400	10621	124
* SBWG-55DCM-1S	165 : 1	125 (32X18)	F-25 , F-30	Ø140	145	F-30, F-25, (F-20)	21150	15599	173
* SBWG-06DCM-1S	232 : 1	140 (36X20)	F-25 , F-30 , F-35	Ø160	150	F-35, F-30, F-25	29520	21773	260
* SBWG-07DCM-1S	247 : 1	180 (45X25)	F-30 , F-35 , F-40	Ø180	180	F-40, F-35, F-30, F-25	45000	33190	375
* SBWG-75DCM-1S	290 : 1	210 (50X28)	F-35 , F-40 , F-48	Ø240	250	F-48, F-40, F-35	73350	54100	586
* SBWG-08DCM-1S	290 : 1	250 (56X32)	F-40 , F-48	Ø250	280	F-48, F-40, F-35	108900	80321	709
* SBWG-09DCM-1S	286 : 1	280 (63X32)	F-48 , F-60	Ø260	300	F-60, F-48	178000	131286	1110
* SBWG-10DCM-1S	277 : 1	320 (70X36)	F-60	Ø320	340	F-60	253000	186600	1782

Size and component specification in this catalogue are subject to change without prior notice for quality improvement.
* Mark has been changed and updated.

DECLUTCH GEAR Pneumatic Actuator

Horizontal Input with Double Reduction Gear Attachment

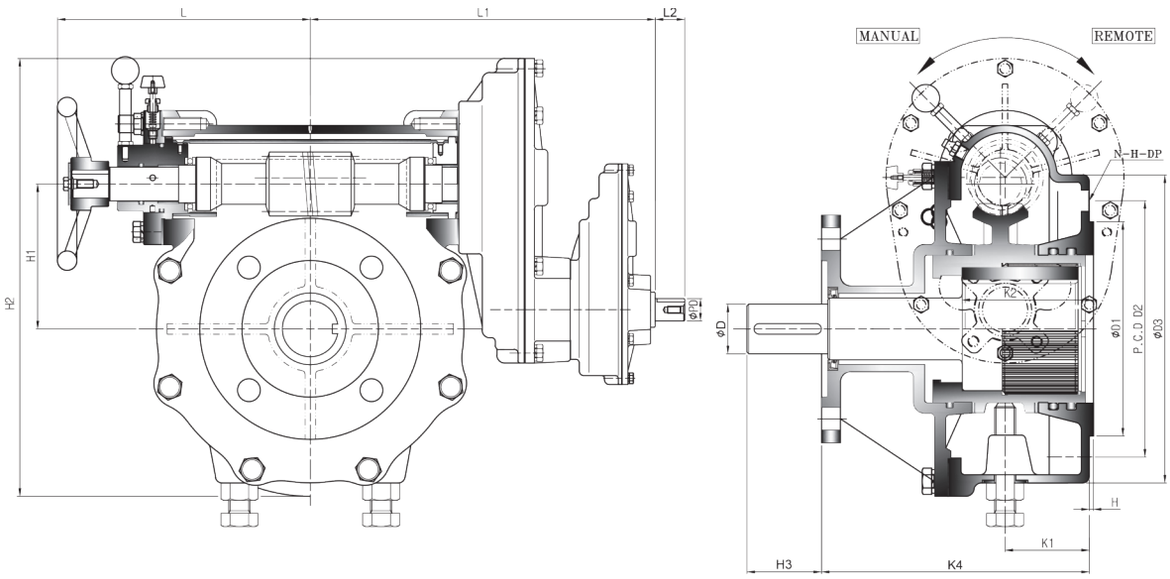

• Pin hole size is same as tap out diameter

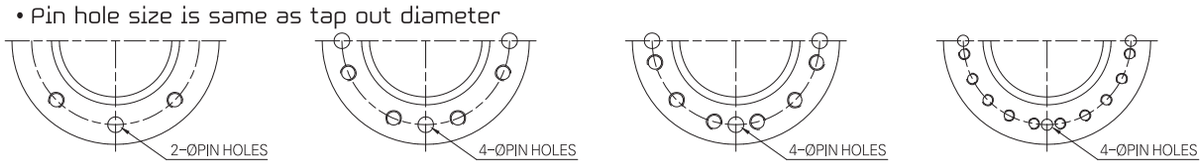

TYPE - A TYPE - B TYPE - C TYPE - D

Dimension >>>

UNIT : mm

DIM / MODEL	BASE PART							EXTERNAL PART							INPUT SHAFT PART			HAND WHEEL
	TYPE	FLANGE	ØD1	P.C.D ØD2	P.C.D N-H-DP	ØD3	H	H1	H2	K1	K2	K4	L	L1	L2	ØPD	KEY	
* SBWG-00DCM-2SD	A	F-12	85	125	4-M12-18	165	2	69.5	210	43	70	149.5	154	261	29	21	6X6	300
* SBWG-01DCM-2SD		F-14	100	140	4-M16-24	190		87	235.5	53	80	174	163	270				300
* SBWG-02DCM-2SD		F-16	130	165	4-M20-30	220		95.5	282	58	90	191.5	184	288.5	29	21	6X6	300
* SBWG-03DCM-2SD	B	F-16 (F-20)	160	205	8-M16-24	250	3	109	312	61	100	206	194	298.5	29	21	6X6	400
* SBWG-35DCM-2SD		F-25	200	254	8-M16-24	300		127.5	339.5	72	110	225	210	316.5				
* SBWG-04DCM-2SD		F-25	200	254	8-M16-24	300		147	417.5	73	120	242	247	352.5	34	26	8X7	500
* SBWG-05DCM-2SD		F-30	230	298	8-M20-30	350		174	469.5	78	130	247.5	257	362.5				560
* SBWG-55DCM-2SD						350		196	516.5	80	170	256	277	382.5				
* SBWG-06DCM-2SD		F-35	260	356	8-M30-45	415		222	621	109	190	302	316	509	34	32	10X8	630
* SBWG-07DCM-2SD		F-40	300	406	8-M36-55	475		272.5	723	116	200	349	350.5	524				710
* SBWG-75DCM-2SD	C	F-48	370	483	12-M36-55	560	5	313	860	120	210	430	389.5	640	44	38	12X8	800
* SBWG-08DCM-2SD						560		366	968	125	220	439	424.5	676				900
* SBWG-09DCM-2SD	D	F-60	470	603	20-M36-55	700	5	435.5	1107.5	138	230	467	465	716	44	38	12X8	900
* SBWG-10DCM-2SD						800		498	1191	352	240	562	550	860	58	50	16X10	1000

Size and component specification in this catalogue are subject to change without prior notice for quality improvement.
* Mark has been changed and updated.

Feature >>>

- All mounting bases conform to ISO 5210/1 standards.
- All castings are ductile iron, Class 65-45-12 excellent strength and impact resistance.
- Worm gear material is available in two option.
  - Ductile iron,Class 80-55-06
  - Aluminum bronze, B148-C95800
- Worm is 1045 heat treated Carbon steel.
- Removable splined bushing to permit accurate positioning between gear drive and valve stem.
- Options include hand wheels, chain and etc.

Global Leader SAMBO SPIRAL BEVEL GEAR ACTUATORS

The World's Highest Quality!

Bushing Type

Splines permit accurate alignment of valve stem key.

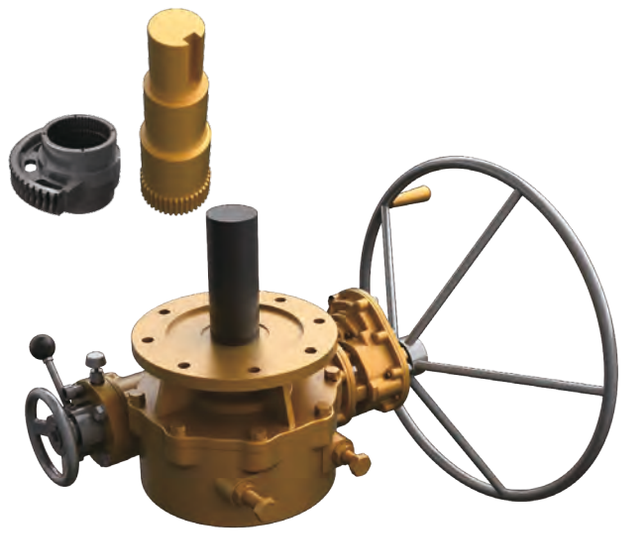

Manual Override Operation >>>

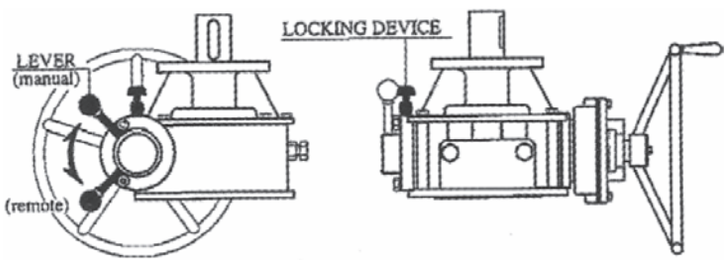

- Somewhere it should be noted that these units have been specifically developed for use with pneumatic and Hydrauric Actuators providing a positve mechanical means of manual operation.

1. Pull up on locking device knob.
2. Rotate lever to "Manual" position.
3. Handwheel can now be operated.
   Note : pneumatic actuator is now fully disengaged.
4. The lever must be placed back in "Remote" position for pneumatic operation.

CAUTION

- Operate to check the position of manual and remote.
- When convert "manual" position,control the position of worm shaft and then operate to accord with worm gear.

Selection Chart for Manual Operation >>>

SIZE / MODEL	MAX. GEAR RATIO (Changeable)	MAX. STEM ACCEPTANCE	BASE MOUNTING OPTION & STANDARD	PNEUMATIC PART			MAX. TORQUE CAPACITY		WEIGHT
				ØD	H3	MOUNTING OPTION	N–m	Ft . lbf	Kg
* SBWG-00DCM-2SD	266 : 1	36 (10X8)	F–10 , F–12	Ø45	60	F–12, F–10	980	723	16
* SBWG-01DCM-2SD	298 : 1	46 (14X9)	F–10 , F–12 , F–14	Ø55	75	F–14, F–12, F–10	1600	1180	24
* SBWG-02DCM-2SD	429: 1	60 (18X11)	F–12 , F–14 , F–16	Ø65	90	F–16, F–14, F–12	2500	1844	36
* SBWG-03DCM-2SD	467 : 1	75 (20X12)	F–14 , F–16 , (F–20)	Ø70	90	F–16, F–14, F–12	3800	2803	51
* SBWG-35DCM-2SD	471 : 1	80 (22X14)	F–16 , (F–20) , F–25	Ø80	90	F–25, (F–20), F–16, F–14	5600	4130	70
* SBWG-04DCM-2SD	958 : 1	95 (25X14)	F–16 , (F–20) , F–25	Ø90	90	F–25, (F–20), F–16	9600	7081	101
* SBWG-05DCM-2SD	1026 : 1	115 (32X18)	(F–20), F–25 , F–30	Ø110	145	F–30, F–25, (F–20)	14400	10621	130
* SBWG-55DCM-2SD	1061 : 1	125 (32X18)	F–25 , F–30	Ø140	145	F–30, F–25, (F–20)	21150	15599	179
* SBWG-06DCM-2SD	2088 : 1	140 (36X20)	F–25 , F–30 , F–35	Ø160	150	F–35, F–30, F–25	29520	21773	275
* SBWG-07DCM-2SD	2218 : 1	180 (45X25)	F–30 , F–35 , F–40	Ø180	180	F–40, F–35, F–30, F–25	45000	33190	390
* SBWG-75DCM-2SD	4645 : 1	210 (50X28)	F–35 , F–40 , F–48	Ø240	250	F–48, F–40, F–35	73350	54100	627
* SBWG-08DCM-2SD	4645 : 1	250 (56X32)	F–40 , F–48	Ø250	280	F–48, F–40, F–35	108900	80321	750
* SBWG-09DCM-2SD	4574 : 1	280 (63X32)	F–48 , F–60	Ø260	300	F–60, F–48	178000	131286	1152
* SBWG-10DCM-2SD	6929.4 : 1	320 (70X36)	F–60	Ø320	340	F–60	253000	186600	2164

Size and component specification in this catalogue are subject to change without prior notice for quality improvement.
* Mark has been changed and updated.

SAMBO INDEX

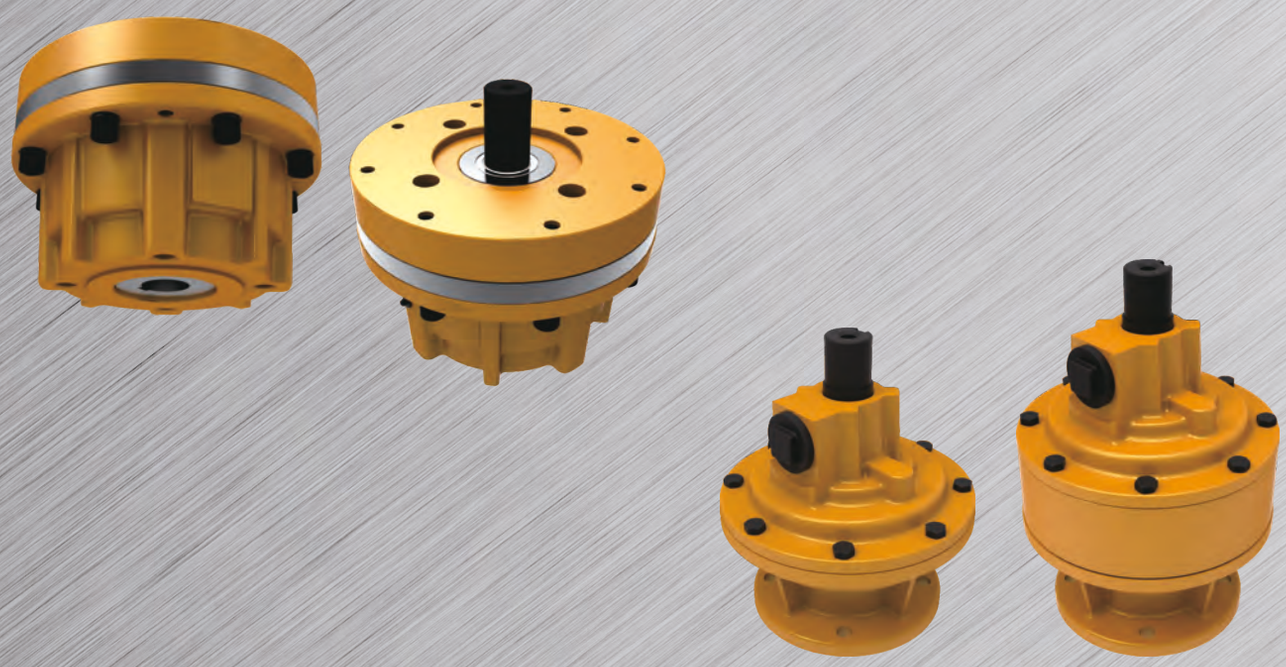

ETC.

Size and component specification in this catalogue are subject to change without prior notice for quality improvement.
* Mark has been changed and updated.

PRODUCTS

Global Leader
SAMBO
GEAR ACTUATORS for Industrial Valves

The World's Highest Quality!

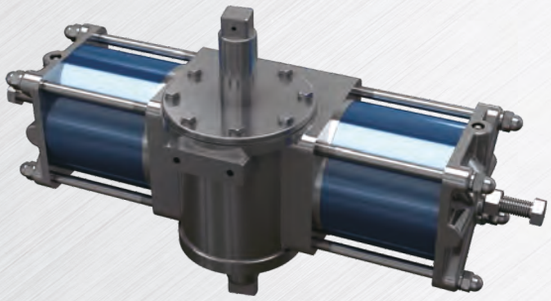

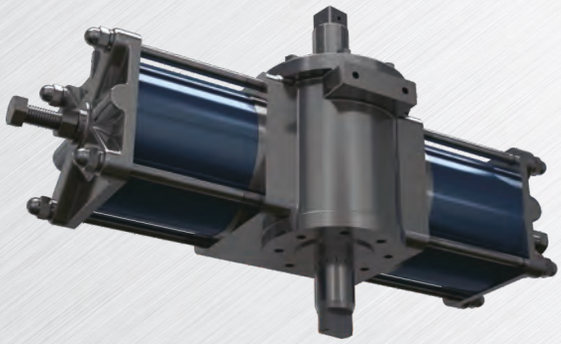

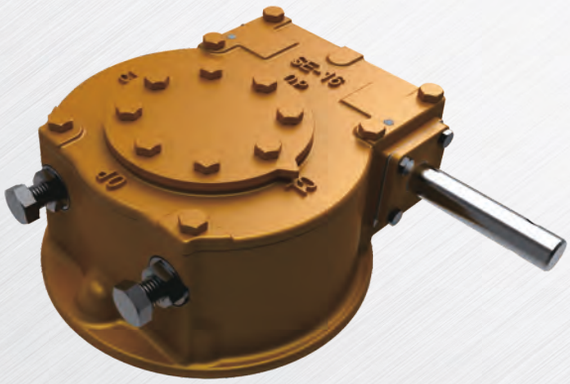

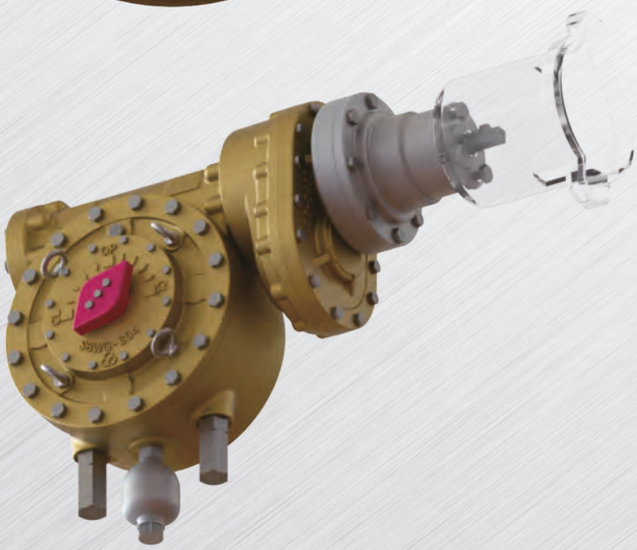

Size and component specification in this catalogue are subject to change without prior notice for quality improvement.
* Mark has been changed and updated.

Planetary Gear Reduction
Vertical Input

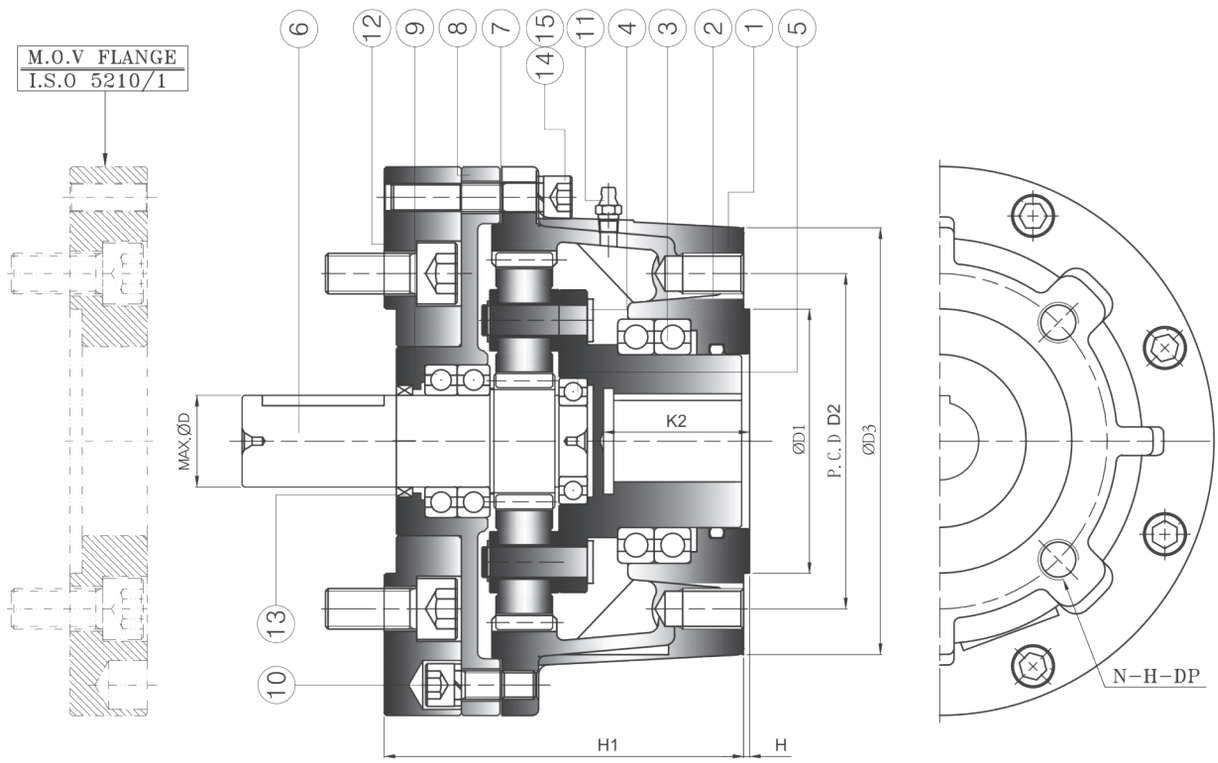

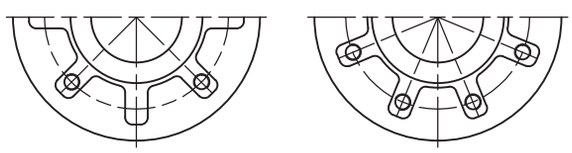

TYPE – A TYPE – B

Global Leader
SAMBO
SPIRAL BEVEL GEAR ACTUATORS

The World's Highest Quality!

Dimension >>>

UNIT : mm

MODEL \ DIM	BASE PART										SELECTION CHART FOR OPERATORS				
	TYPE	FLANGE	ØD1	P.C.D		ØD3	H	H1	MAX ØD	K2	GEAR RATIO	MAX. Stem Acceptance	MAX. Torque Capacity		WEIGHT
				ØD2	N–H–DP								N · m	ft · lbf	kg
SBPA–10	A	F–07,F–10	70	102	4–M10–18	125	3	117	30	45	3.6 :1	35(10X8)	600	443	17
SBPA–12		F–10, F–12	85	125	4–M12–20	150		128	35	48	3.6 :1	40(12X8)	1200	885	26
SBPA–14		F–12, F–14	100	140	4–M16–25	175		160	40	58	3.6 :1	50(14X9)	1800	1327	36
SBPA–16		F–14, F–16	130	165	4–M20–30	210		177	45	68	4 :1	60(18X11)	2800	2065	48
SBPA–25	B	F–16, F–25	200	254	8–M16–25	300	3	194	50	78	5 :1	70(20X12)	4800	3540	63

Size and component specification in this catalogue are subject to change without prior notice for quality improvement.
* Mark has been changed and updated.

Features >>>

- Axis of input and output is locating on concentricyty.
- Consistent direction of rotation of axis of input & output.
- Transmit power per volume is excellent.
- High capacity, Compact sized, Ligh-weight.
- Due to small friction loss transmit power is effective .
- Can apply to various kind of valves.

Application >>>

- Dual Speed Input Gear Box can make Valve & Valve Gear box' s actuator operating time (operating speed) higher by reducing the total number of turns.
- Switching between the two ratios is done by simply pushing or pulling on the input shaft. The high ratio gearing is used for the portion of the valve stroke where the torque requirement is high to initially open a valve or the last cycles to close it.
- During travel the valve torque usually drops considerably and the lower ratio can be employed to reduce the number of input turns required.

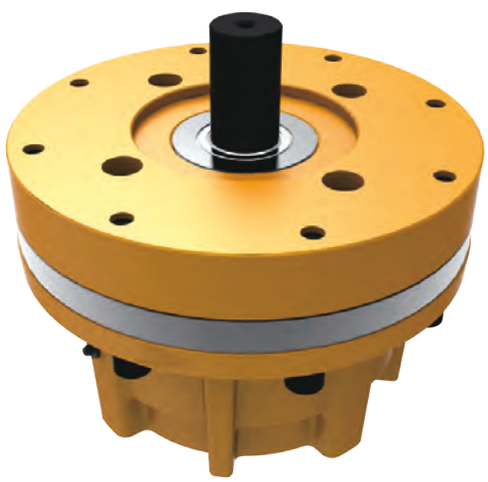

Part List >>>

NO	PART NAME	MATERIAL
1	Out Base	Ductile Iron
2	O–Ring	Silicon
3	Bearing	A295–52100
4	Carrier Kit	Steel
5	Ball Bearing	A295–52100
6	Sun Pinion	A576–1045
7	Gasket	N–Asbestos
8	Support Pad	Ductile Iron

NO	PART NAME	MATERIAL
9	Ball Bearing	A295–52100
10	Wrench Bolt	A193–B7
11	Grease Nipple	Steel
12	Input Base	Steel
13	Oil Seal	NBR
14	Washer Spring	Steel
15	Wrench Bolt	A193–B7

Size and component specitication in this catalogue are subject to change without prior notice for quality improvement.
* Mark has been changed and updated.

SAMBO

Planetary Gear Reduction

Dual Input Speed Gear Box

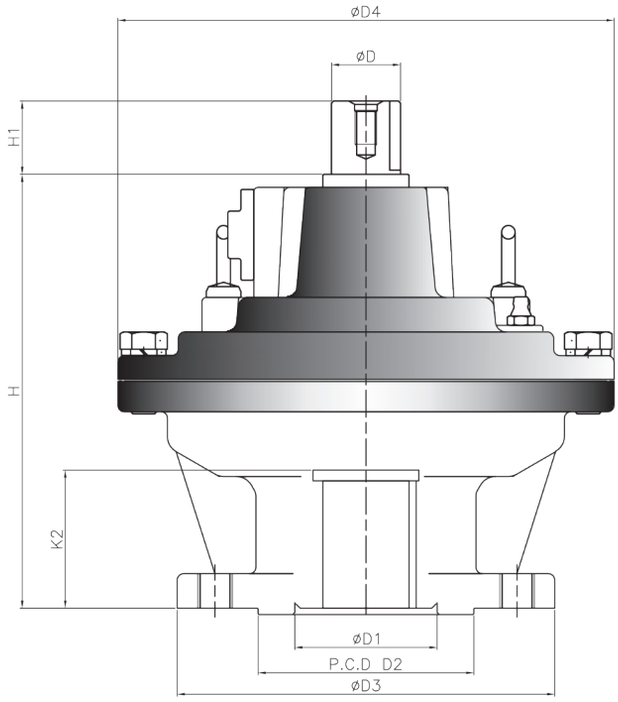

Global Leader

SAMBO

SPIRAL BEVEL GEAR ACTUATORS

The World's Highest Quality!

Dimension >>>

UNIT : mm

DIM / MODEL	BASE PART						EXTERNAL PART					INPUT SHAFT PART					
	TYPE	FLANGE	ØD1	P.C.D		ØD3	H	H1	ØD4	ØD	K2	GEAR RATIO		MAX. Stem Acceptance	MAX. Torque Capacity		WEIGHT
				ØD2	N–H–DP							PRIMARY	SECOND		N · m	ft · lbf	kg
SB–DS10	A	F–07,F–10	70	102	4–Ø10–18	125	170	35	162	26	45	1 : 1	3.6 : 1	35(10X8)	300	221	9
SB–DS12		F–10,F–12	85	125	4–Ø12–20	150	184	35	190	32	54	1 : 1	3.6 : 1	40(12X8)	600	443	13
SB–DS14		F–12,F–14	100	140	4–Ø16–25	175	201	35	230	32	64	1 : 1	3.6 : 1	50(14X9)	1200	885	18
SB–DS16		F–14,F–16	130	165	4–Ø20–30	210	227	35	250	32	70	1 : 1	4 : 1	60(18X11)	1800	2065	28
SB–DS25	B	F–16,F–25	200	254	8–Ø16–25	300	260	45	330	38	75	1 : 1	5 : 1	70(20X12)	2500	1844	42

Size and component specification in this catalogue are subject to change without prior notice for quality improvement.
* Mark has been changed and updated.

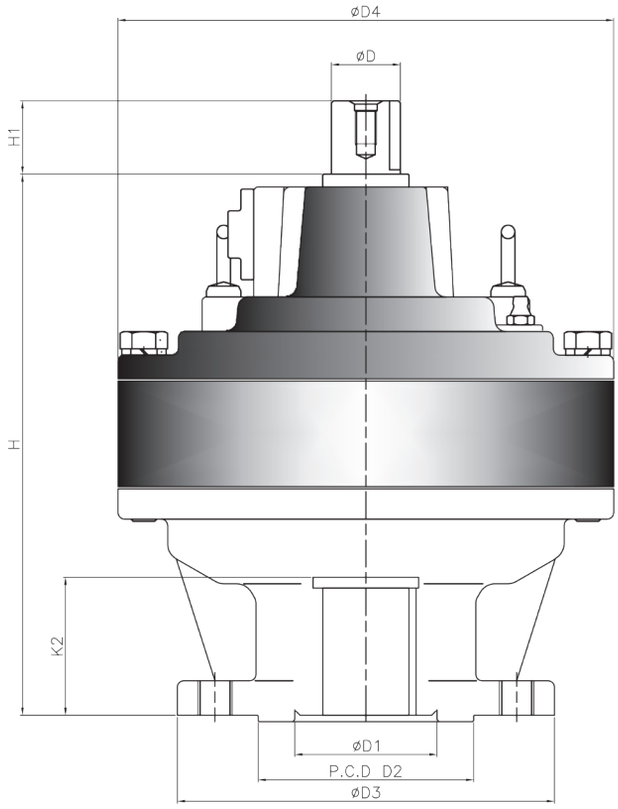

Global Leader
SAMBO
SPIRAL BEVEL GEAR ACTUATORS

The World's Highest Quality!

Dimension >>>

UNIT : mm

DIM / MODEL	BASE PART						EXTERNAL PART					INPUT SHAFT PART					
	TYPE	FLANGE	ØD1	P.C.D		ØD3	H	H1	ØD4	ØD	K2	GEAR RATIO		MAX. Stem Acceptance	MAX. Torque Capacity		WEIGHT
				ØD2	N–H–DP							PRIMARY	SECOND		N · m	ft · lbf	kg
SB–DS10–1S	A	F–07,F–10	70	102	4–Ø10–18	223	170	35	162	26	45	3.6:1	13:1	35(10X8)	300	221	10
SB–DS12–1S		F–10,F–12	85	125	4–Ø12–20	242	184	35	190	32	54	3.6:1	13:1	40(12X8)	600	443	15
SB–DS14–1S		F–12,F–14	100	140	4–Ø16–25	261	201	35	230	32	64	3.6:1	13:1	50(14X9)	1200	885	20
SB–DS16–1S		F–14,F–16	130	165	4–Ø20–30	290	227	35	250	32	70	4:1	16:1	60(18X11)	1800	2065	31
SB–DS25–1S	B	F–16,F–25	200	254	8–Ø16–25	332	260	45	330	38	75	5:1	25:1	70(20X12)	2500	1844	45

Size and component specitication in this catalogue are subject to change without prior notice for quality improvement.
* Mark has been changed and updated.

Torque Limiter

SB-TL Series

- A torque limiter is an automatic device that controls actuator input torque.
- A torque limiter prevents actuator and valve damage due to over-torque.
- A torque limiter is installed to the gearbox individually to prevent over-torque.
- In the event of a over-torque, a torque limiter permanently separates the drive shaft and the driven shaft.
- Decoupling shafts can be re-engaged manually.
- The installation and maintenance manual (IOM) explains how to install and maintain the SAMBO SB-TL operator and spare parts is provided.

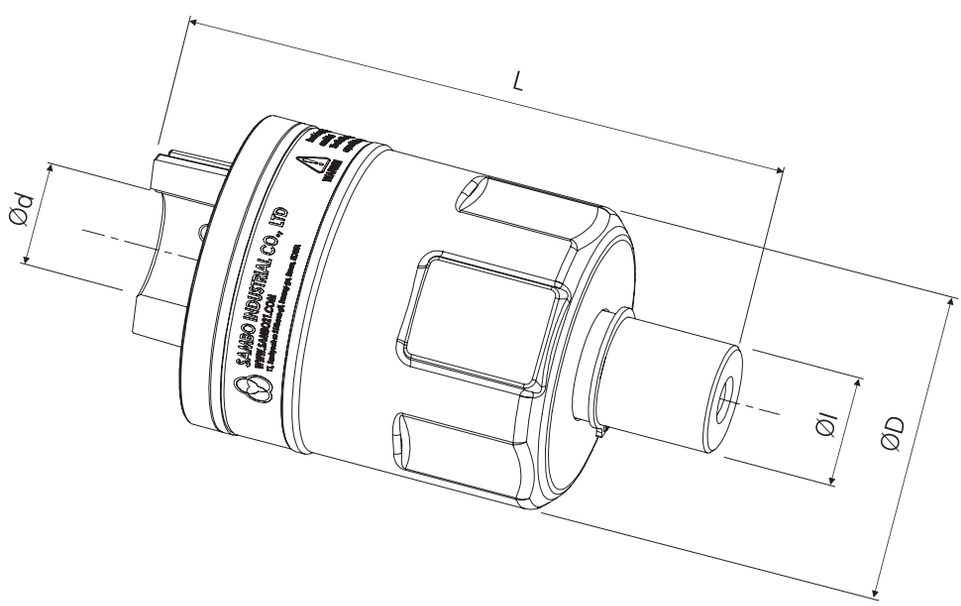

Dimension >>>

DIM / MODEL	External Part		Input	Output
	ØD (mm)	L (mm)	ØI (mm)	Ød (mm)
SB-TL50	60	111	MAX Ø16	MAX Ø16
SB-TL100	81	157	MAX Ø26	MAX Ø26
SB-TL200	90	178	MAX Ø32	MAX Ø38
SB-TL300	102	169	MAX Ø32	MAX Ø38
SB-TL400	117	169	MAX Ø32	MAX Ø38

Size and component specification in this catalogue are subject to change without prior notice for quality improvement.
* Mark has been changed and updated.

Features >>>

- Water Proof : Standard IP67 grade, Option : IP68 grade
- Different type
  - Automatic Re-engage type. (Standard)
  - Clockwise rotation "Close" manual re-engage type.
  - Counter-Clockwise rotation "Close" manual re-engage type.
- Easy torque limit adjustment.
- Durable and easy maintenance.
- Variety applications. (OPTIONAL)

Installation >>>

- Assemble the key on the valve or reducer input shaft.(PC#2)
- Assemble SB-TL according to key direction.(PC#3)
- Fix SB-TL with set screw.(PC#4)
- Assembly of the handle on the input shaft of SB-TL.(PC#5)

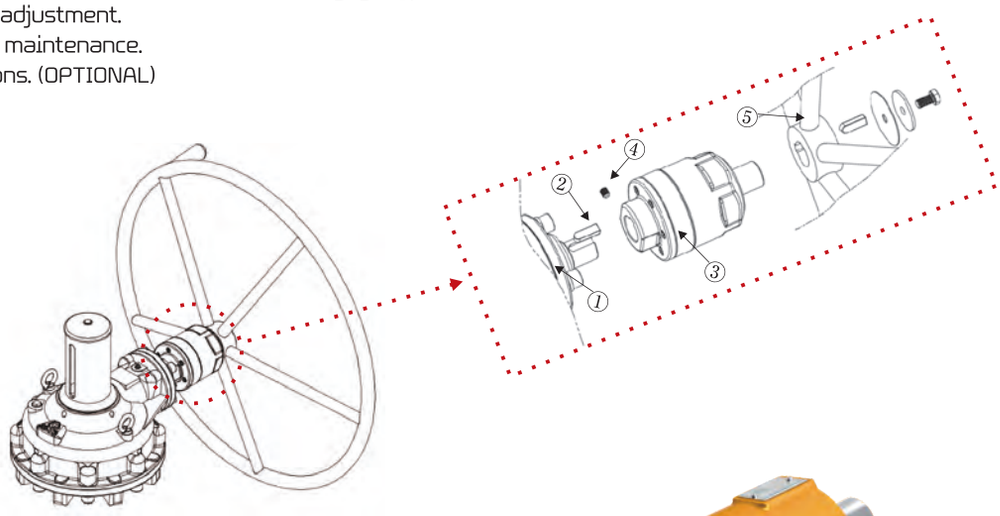

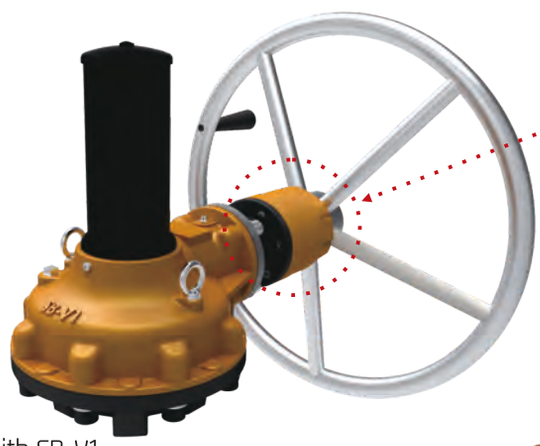

Torque Limiter with SB-V1

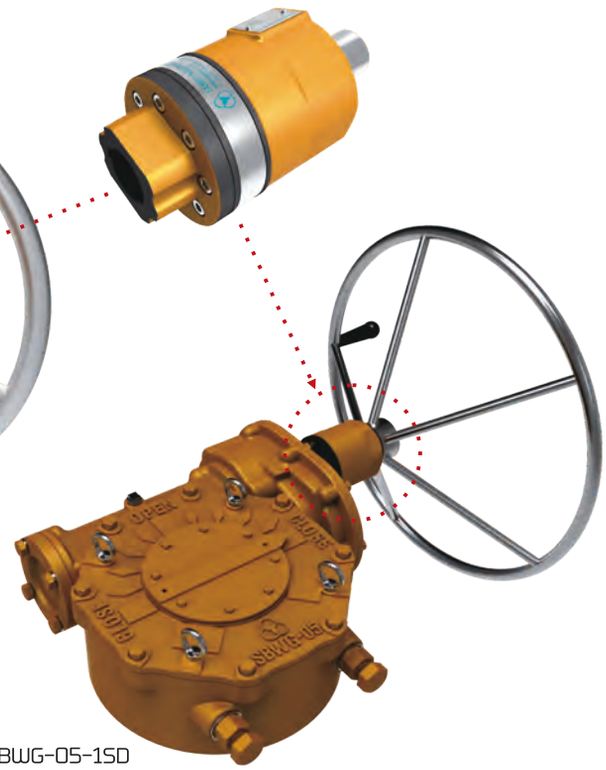

Torque Limiter with SBWG-05-1SD

Performance Specifications >>>

MODEL	Torque Range			Consecutive Repeated Trip Torque Fluctuations	Adjustment screw pitch (mm)	Backlash (mm)	Weight (kg)
	(N.m)	(Kgf.m)	(lbf.ft)				
SB-TL50	20~50	2.03~5.1	14.7~36.9	±10%	2.5	Almost None	3.5
SB-TL100	50~100	5.1~10.2	36.9~73.8	±10%	2.5	Almost None	4.0
SB-TL200	100~200	10.2~20.4	73.8~147.5	±10%	2.5	Almost None	4.7
SB-TL300	200~300	20.4~30.6	147.5~221.3	±10%	2.5	Almost None	5.5
SB-TL400	300~400	30.6~40.8	221.3~295.0	±10%	2.5	Almost None	6.5

Size and component specitication in this catalogue are subject to change without prior notice for quality improvement.
* Mark has been changed and updated.

Temperature Compensating Spring-loaded Stem Nut

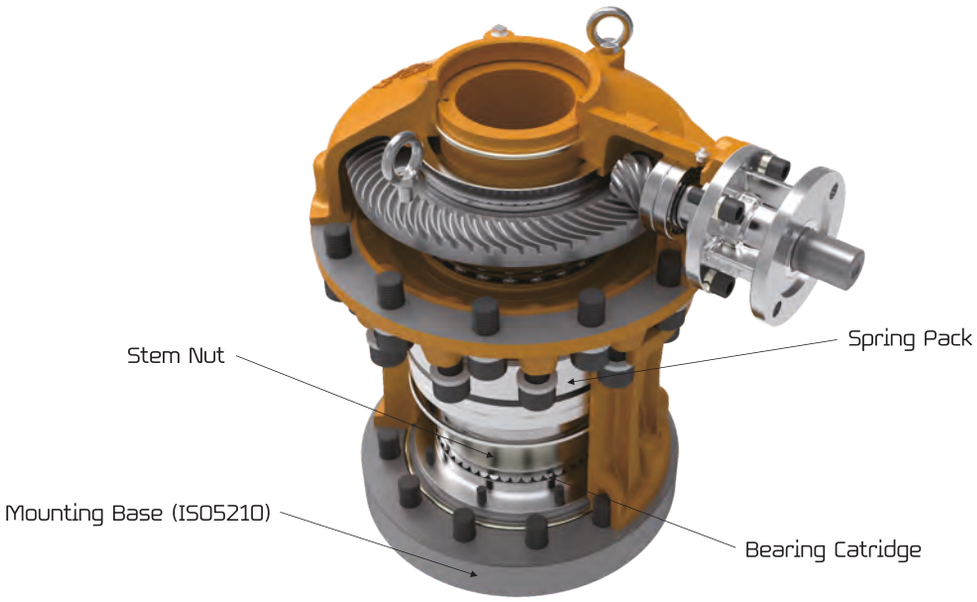

Definition >>>

- TCS can allow for some displacement in axial direction through the gear box stem nut.
- Thus it can prevent damages to valve and gear box caused by excessive high load from outside.
- TSC can be separately attached to bevel gear and super gear box to play the role of buffer.
- The pressure inside TCS is pre-set higher than the valve thrust and it can prevent any movements at normal times.
- When thrust increases with the valve stem's thermal expansion, TCS device starts the absorption and compensation of the thrust.
- Apply for prefabricated stem nut. ► Excellent applicability.
  ► Save maintenance cost.

Structure >>>

TCS can be operated independently or engaged with a bevel gear and super gear box.

- Standard type is applied only in the CLOSED direction.
- Application in both directions may be considered as per requests.

Technical Data >>>

- **Please refer to the data below for maximum longevity and operating environment of TCS.**

MODEL	Spring Stroke	MAX. Thrust	Pre Load		Usable Stroke	MAX. Stem
	mm	KN	KN	mm	mm	mm
TCS160	9.6	160	60	3.5	6.1	60
TCS220	9.6	220	84.5	3.5	6.1	68
TCS340	9.2	340	146	3.8	5.4	82
TCS400	11.8	400	160	4.5	7.3	96
TCS500	14.4	500	200	5.5	8.9	105
TCS600	15.4	550	270	6.0	9.4	110
TCS800	16	800	300	6.2	10	115
TCS1400	17	1,400	400	6.4	11	120
TCS2000	18	2,000	700	6.5	12	140
TCS3000	18	3,000	900	6.6	12	170

- Contact us if you exceed specifications or if you have a special environment.

Size and component specitication in this catalogue are subject to change without prior notice for quality improvement.
* Mark has been changed and updated.

Global Leader
SAMBO
SPIRAL BEVEL GEAR ACTUATORS

SAMBO
The World's Highest Quality!

The World's Highest Quality!

Application >>>

Required information for application of TCS device are :

- Valve seating thrust : T_{SEAT}
- Maximum allowable stem thrust : T_{AMAX}
- Length of stem expansion : L

Remarks >>>

- As the inside of TCS is pre-set at considerably high pressure, it needs to be disassembled and operated with proper care.
- Please do not disassemble or re-assemble before consultation with our company or qualified experts :
  Disassembly & assembly to be done with special tools.

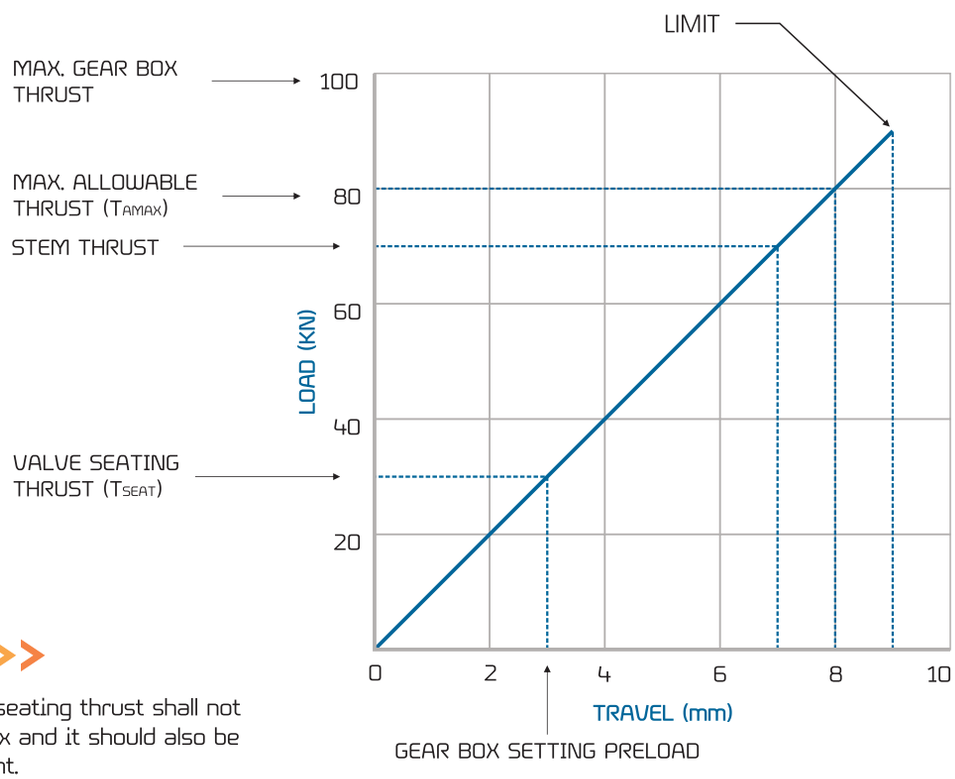

Selection of TCS >>>

- Maximum allowable thrust & valve seating thrust shall not exceed maximum thrust of gear box and it should also be below maximum spring displacement.
  : less than 60% of spring load.

Example >>>

With 80KN of maximum allowable thrust, 30KN of Valve seating trust & 4mm of stem expansion, what kind of TCS model is to be selected?

1. Check maximum load on the graph(select larger than maximum allowable thrust) : 100KN
2. Check the spring displacement of Valve seating thrust(the pre-set value of gear box) : 3mm
3. Length of stem expansion shall be smaller than maximum allowable thrust : 70KN
4. Select a model as per the curve on the graph satisfying all above conditions.
5. Decide temperature range, output RPM, etc.

SE Series Quarter-turn Gear Actuators >>>

- The Sambo SE series is designed to meet stringent requirements and provide the necessary durability and reliability.
- All castings are spheroidal graphite cast iron, and CLASS 65-45-12 has high strength and impact resistance.
- All products use integral worm shafts and high strength bearings to support axial and radial loads.
- Two types of separable bushing and integral type make maintenance easy.
- It has double sealing structure and excellent waterproof and dust proof capability.
- Finish painting is Kovinyl wash primer.

Application >>>

- The Sambo SE series is a 1/4 turn gear actuator with ball, plug, can be applied to butterfly valves, it can also be used for general devices.

Features >>>

- 8 model products. & 5500 N.m Torque Range. & ip67 STANDARD.
- -20 degrees to 80 degrees. & According to all mounting bases iso5211.
- All castings ductile iron(Class 65-45-12) excellent strength and impact resistance.
- The worm is a single-body, heat-treated high-strength carbon steel.
- Waterproof and dust proof thanks to double sealing structure IP67 STANDARD.
- Application of high strength worm gear.
- Use adjustable stop bolts +-5 degrees.
- Removable bush type for easy maintenance.
- Open-close-open on the cover is free to change direction with the position indicator.

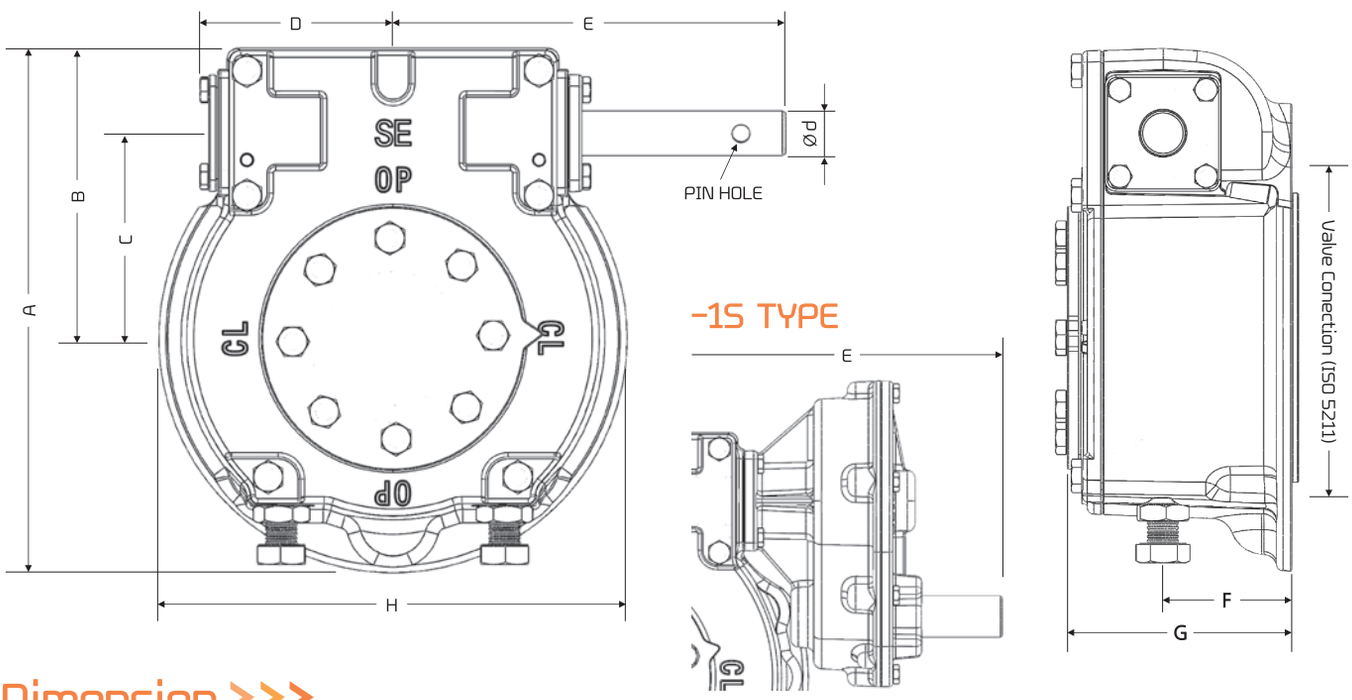

Dimension >>>

unit : mm

Model	A	B	C	D	E	F	G	H	Ød
SE-10	129	69	43.5	45	121	36	68	120	12
SE-12	155	82	55	54	129	43	77	145	14
SE-14	192.5	105	72.5	65	167	52	90	175	16
SE-16	234	129	92	86.5	175.5	58	99	210	20
SE-20	272	147	107	96.5	180	63	110	250	25
SE-20-1S					258.5				
SE-25	316	166	122.5	106.5	210	65	114	300	
SE-25-1S					268.5				

Size and component specification in this catalogue are subject to change without prior notice for quality improvement.
* Mark has been changed and updated.

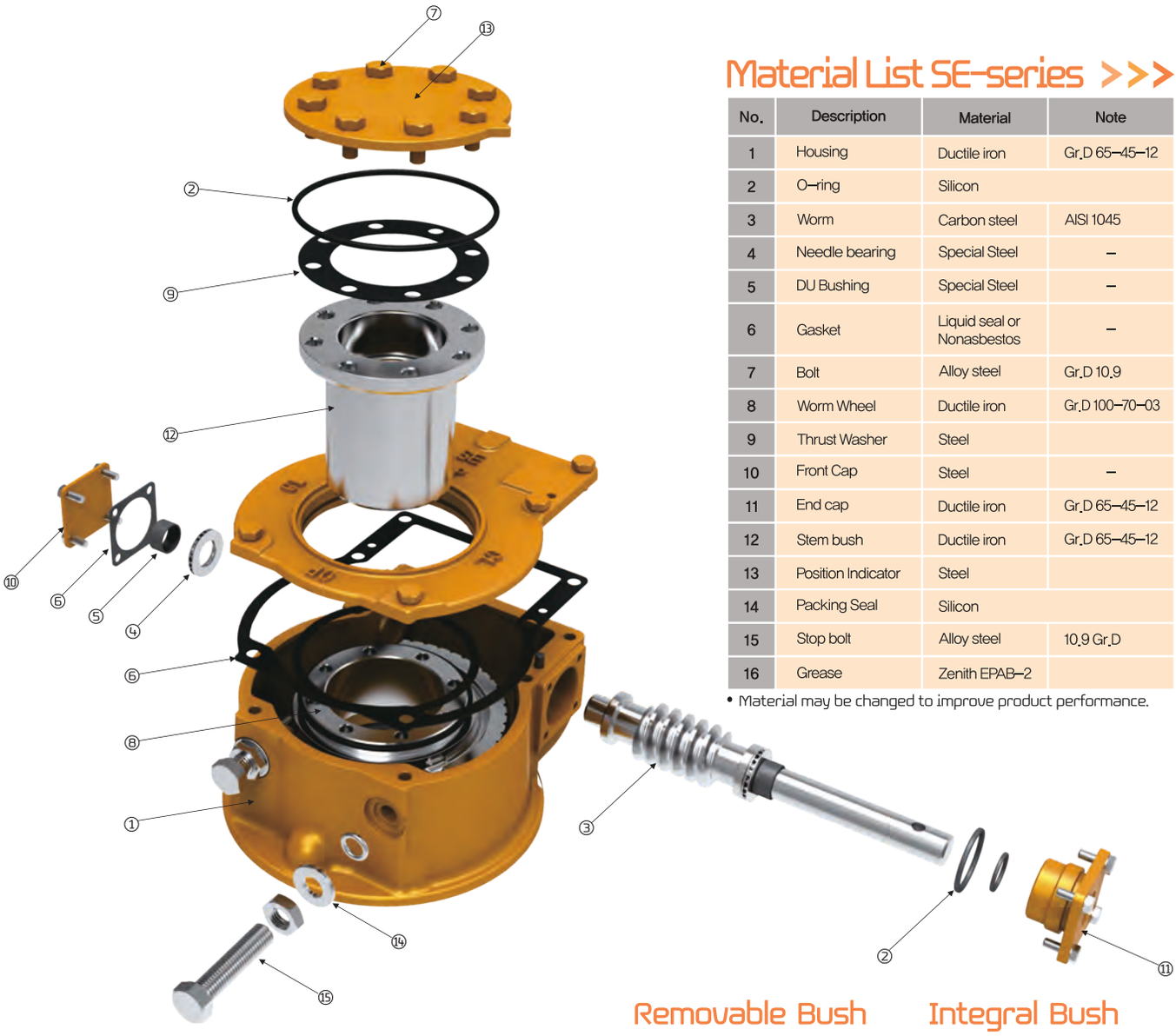

Material List SE-series >>>

No.	Description	Material	Note
1	Housing	Ductile iron	Gr.D 65–45–12
2	O–ring	Silicon	
3	Worm	Carbon steel	AISI 1045
4	Needle bearing	Special Steel	–
5	DU Bushing	Special Steel	–
6	Gasket	Liquid seal or Nonasbestos	–
7	Bolt	Alloy steel	Gr.D 10.9
8	Worm Wheel	Ductile iron	Gr.D 100–70–03
9	Thrust Washer	Steel	
10	Front Cap	Steel	–
11	End cap	Ductile iron	Gr.D 65–45–12
12	Stem bush	Ductile iron	Gr.D 65–45–12
13	Position Indicator	Steel	
14	Packing Seal	Silicon	
15	Stop bolt	Alloy steel	10.9 Gr.D
16	Grease	Zenith EPAB–2	

• Material may be changed to improve product performance.

Removable Bush

Integral Bush

Performance Specifications >>>

Model	Ratio	Torque (N.m)		M.A	Valve Conection (Iso5211)		Max. Stem (mm)			weight (kg)
		Output	Input	+–10%	std.	option	Bore	Square	Height	
SE–10	38:1	300	26.1	11.5	F10	F07, F05	25	20	63	3.2
SE–12	42:1	600	50.4	11.9	F12	F10, F07	35	28	72	5.5
SE–14	46:1	1400	102.2	13.7	F14	F12, F10	45	36	86	10
SE–16	50:1	2600	178.1	14.6	F16	F14, F12, F10	58	46	95	14
SE–20	54:1	3800	233.1	16.3	(F20)	F16, F14, F12	68	54	105	21
SE–20–1S	135:1		101.6	37.4						25
SE–25	58:1	5500	317.9	17.3	F25	(F20), F16, F14	80	64	108	29
SE–25–1S	145:1		138.2	39.8						33

Size and component specitication in this catalogue are subject to change without prior notice for quality improvement.
* Mark has been changed and updated.

SBWG-S : Subsea Gear Box

New Developed Products.
Designed for the Most Extreme Deep Sea Applications.

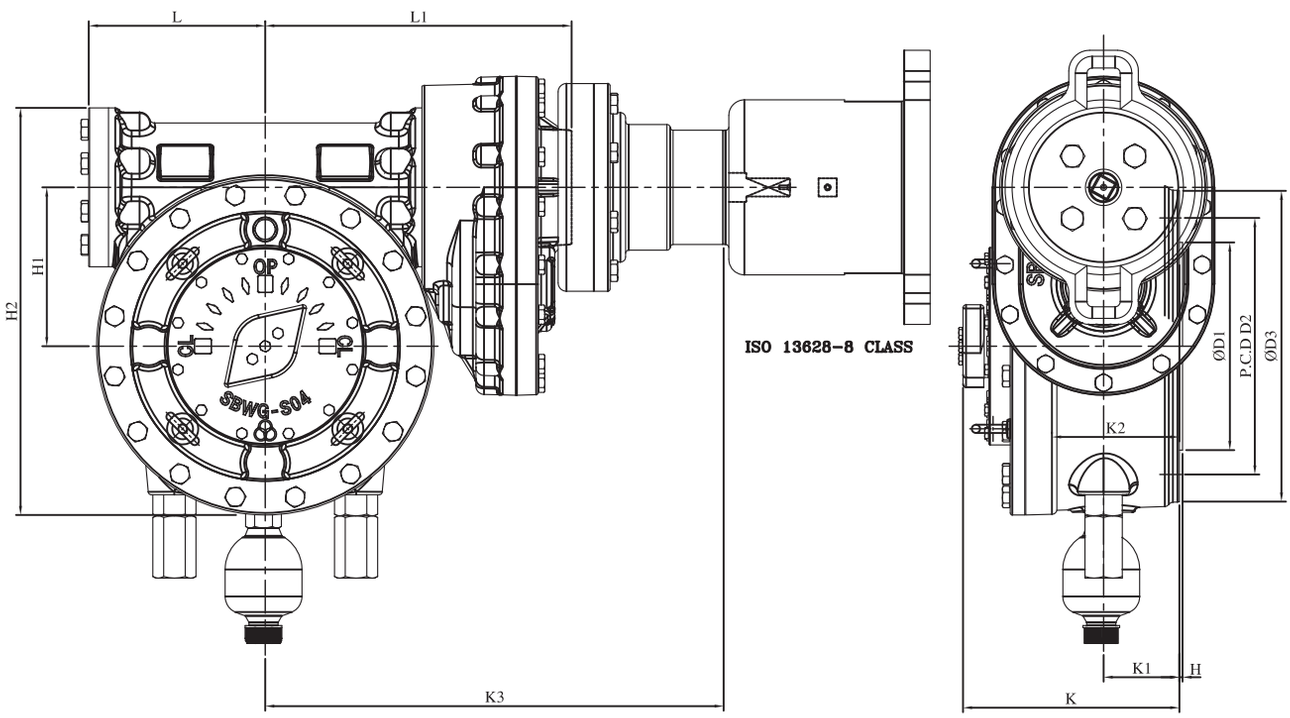

Dimension >>>

UNIT : mm

MODEL \ DIM	BASE PART							EXTERNAL PART								INPUT SHAFT PART			HAND WHEEL
	TYPE	FLANGE	ØD1	P.C.D ØD2	P.C.D N-H-DP	ØD3	H	H1	H2	K	K1	K2	K3	L	L1	L2	ØPD	KEY	
SBWG-S00-1SD	A	F-12	85	125	4-M12-18	165	2	69.5	210	127	43	53.6	283	86	166	29	21	6X6	300
SBWG-S01-1SD		F-14	100	140	4-M16-24	190		82.5	235.5	136	53	65	292	95	175				400
SBWG-S02-1SD		F-16	130	165	4-M20-30	220		97	282	160	56	75.5	345	108	190.5	34	26	8X7	500
SBWG-S03-1SD	B	F-16 (F-20)	160	205	8-M16-24	250	3	112	312	166	59	87	355	118	200.5	34	26	8X7	560
SBWG-S35-1SD		F-25	200	254	8-M16-24	300		127	352	186	72	100	366	125	218.5				
SBWG-S04-1SD		F-25	200	254	8-M16-24	300		153	417.5	208	73	120	442	153	250	34	32	10X8	630
SBWG-S05-1SD		F-30	230	298	8-M20-30	350		180	469.5	225	78	141	452	163	260				710
SBWG-S55-1SD						350		202	516.5	232	80	144	463	183	280				
SBWG-S06-1SD		F-35	260	356	8-M30-45	415		230	621	280	109	173	523	217	349	44	38	12X8	800
SBWG-S07-1SD		F-40	300	406	8-M36-55	475		280.5	723	307	116	209	558	252	384				900
SBWG-S75-1SD	C	F-48	370	483	12-M36-55	560	5	326	860	346	120	220	701	279	485	58	50	16X10	1000
SBWG-S08-1SD						560		379	968	354	125	245	736	314	520				

Size and component specification in this catalogue are subject to change without prior notice for quality improvement.
* Mark has been changed and updated.

Feature >>>

- Quarter-turn Worm gear operators.
- Application of high load input prevention device.
- Applicable to subsea more than 3,000m.
- Using angular contact Taper Roller Bearing.
- Double sealing.
- Self Locking.
- Membrane type pressure compensator.
- Permanent lubrication with eco-compatible oil.
- Many ratios available.
- Horizontal or vertical mounted ROV input from class 1 to 7.

Global Leader
SAMBO
SPIRAL BEVEL GEAR ACTUATORS

The World's Highest Quality!

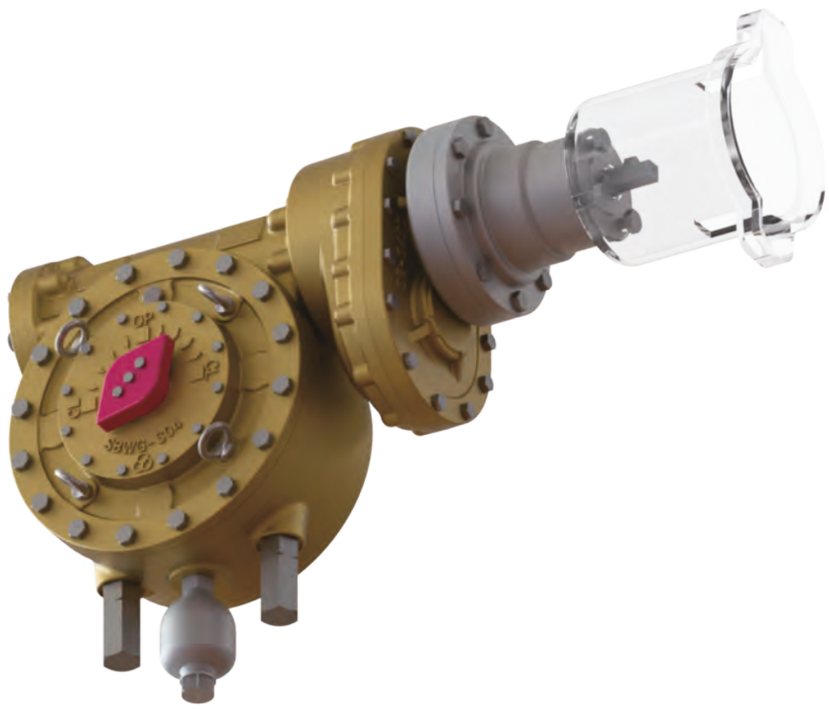

Selection Chart for Manual Operation >>>

SIZE / MODEL	GEAR RATIO	MAX. STEM ACCEPTANCE	BASE MOUNTING OPTION & STANDARD	MAX. TORQUE CAPACITY		WEIGHT
				N–m	Ft . lbf	Kg
SBWG–S00–1SD	160 : 1	36 (10X8)	F–10 , F–12	1200	885	25
SBWG–S01–1SD	176 : 1	46 (14X9)	F–10 , F–12 , F–14	2000	1475	30
SBWG–S02–1SD	308 : 1	60 (18X11)	F–12 , F–14 , F–16	2800	2065	48
SBWG–S03–1SD	333.7 : 1	75 (20X12)	F–14 , F–16 , (F–20)	4300	3172	63
SBWG–S35–1SD	333.7 : 1	80 (22X14)	F–16 , (F–20) , F–25	6100	4499	76
SBWG–S04–1SD	504 : 1	95 (25X14)	F–16 , (F–20) , F–25	10400	7671	130
SBWG–S05–1SD	540 : 1	115 (32X18)	F–25 , F–30	15900	11727	168
SBWG–S55–1SD	558 : 1	125 (32X18)	F–25 , F–30	23500	17333	202
SBWG–S06–1SD	1024 : 1	140 (36X20)	F–25 , F–30 , F–35	32800	24192	338
SBWG–S07–1SD	1088 : 1	180 (45X25)	F–30 , F–35 , F–40	51100	37689	426
SBWG–S75–1SD	1650 : 1	210 (50X28)	F–35 , F–40 , F–48	81500	60111	810
SBWG–S08–1SD	1650 : 1	250 (56X32)	F–40 , F–48	121000	89245	1031

Size and component specitication in this catalogue are subject to change without prior notice for quality improvement.
* Mark has been changed and updated.

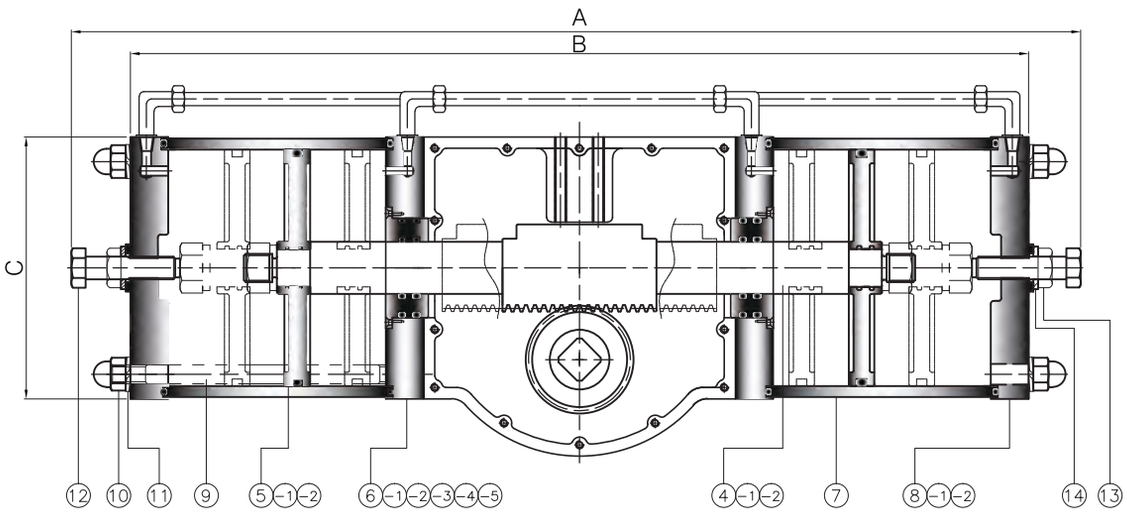

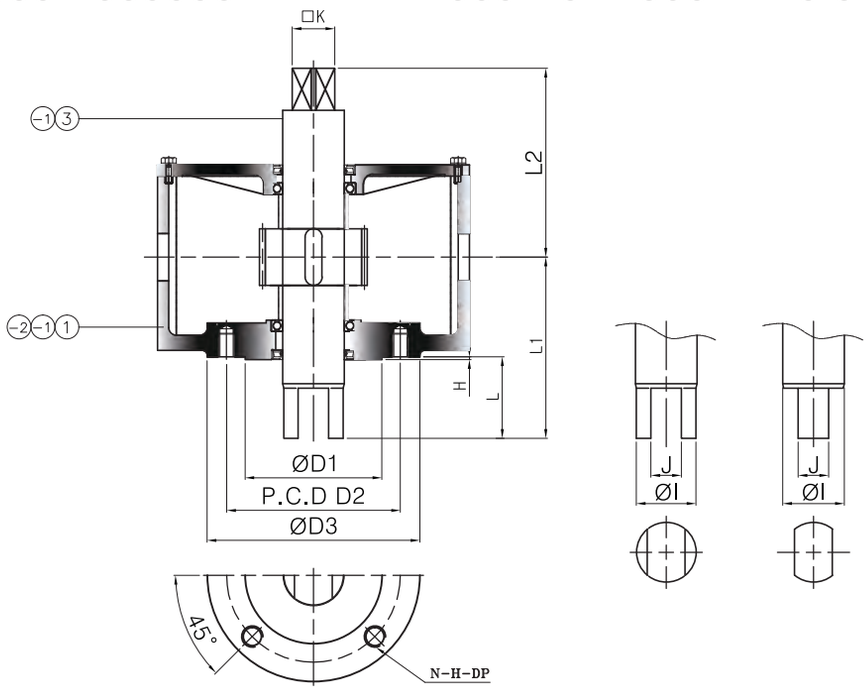

Dimension >>>

UNIT : mm

DIM / MODEL	BASE PART						EXTERNAL PART								
	FLANGE	ØD1	P.C.D ØD2	P.C.D N-H-DP	ØD3	H	A	B	C	ØI	J	□K	L	L1	L2
SB-50AIR	F-10	70	102	4-M10-17	125	3	385	324	68	20	12	15	35	66	129
SB-80AIR	F-12	85	125	4-M12-20	150		560	476	107	34	16	21	50	118	186
SB-125AIR							655	563	155	39	16	25	65	163	202
SB-160AIR	F-14	100	140	4-M16-25	175		580	606	175	39	16	25	80	170	212
SB-200AIR	F-16	130	165	4-M20-30	210		820	704	216	39	16	25	95	205	218
SB-250AIR	F-25	200	254	8-M16-32	300		1170	1050	277	49	20	33	105	212	221

Size and component specification in this catalogue are subject to change without prior notice for quality improvement.
* Mark has been changed and updated.

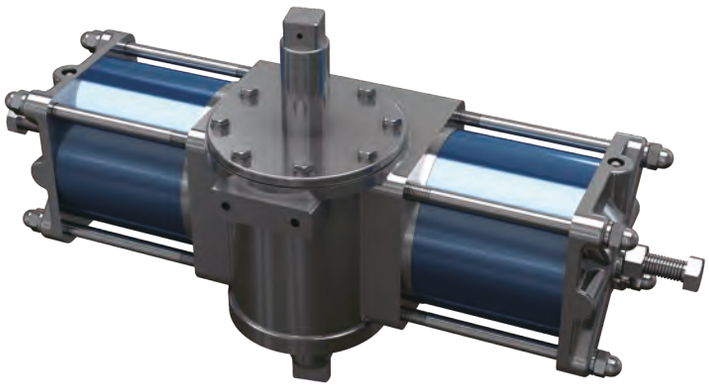

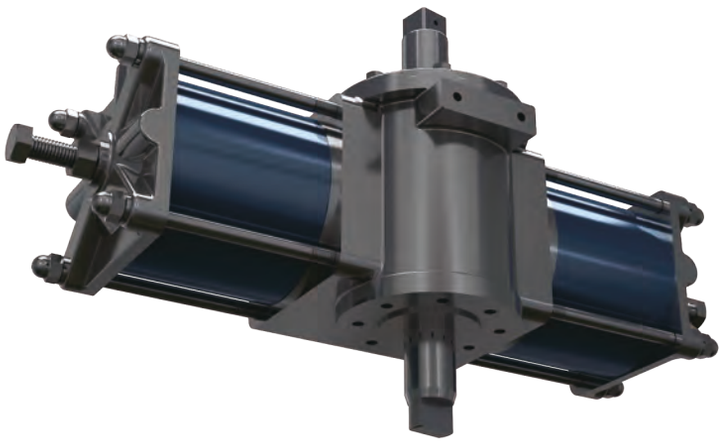

Global Leader
SAMBO
SPIRAL BEVEL GEAR ACTUATORS

The World's Highest Quality!

Part List >>>

MATERIAL ACCORDING TO ASTM			
NO	PART NAME	MATERIAL	REMARK
1	Body	AC4C	
–1	O–Ring	Silicon	
–2	Du–Bush	BSC2	
2	Body–Cover	AC4C	
–1	O–Ring	Silicon	
–2	O–Ring	Silicon	
–3	Du–Bush	BSC2	
–4	HEX. Bolt	SUS304	
–5	Spring Washer	SUS304	
3	STEM	A576–1045	
–1	Key	A576–1045	
4	Rack	A576–1045	
–1	HEX. Nut	SUS304	
–2	Spring Washer	SUS304	
5	Piston	AC4C	
–1	O–Ring	Silicon	
–2	O–Ring	Silicon	
6	Pipe Cap	AC4C	
–1	O–Ring	Silicon	
–2	O–Ring	Silicon	
–3	O–Ring	Silicon	
–4	O–Ring	Silicon	
–5	Du–Bush	BSC2	
7	Cylinder Tube	A120	
8	Pipe Cover	AC4C	
–1	O–Ring	Silicon	
–2	O–Ring	Silicon	
9	Rod Bolt	A576–1045	
10	Cap Nut	A576–1045	
11	Spring Washer	A576–1045	
12	HEX. Bolt	SUS304	
13	HEX. Nut	SUS304	
14	Plane Washer	SUS304	

Selection Chart >>>

MODEL	Double Acting 1/4 Turn Actuators									
	Diameter of Cylinder (mm)	Torque Capacity (N · m)								
		2bar	3bar	4bar	5bar	6bar	7bar	8bar	9bar	10bar
SB–50AIR	50	10	14	19	24	29	34	38	43	48
SB–80AIR	80	39	59	79	98	118	138	158	177	197
SB–125AIR	125	108	162	216	270	325	379	433	487	541
SB–160AIR	160	201	301	402	502	603	703	804	904	1,004
SB–200AIR	200	369	554	739	923	1,108	1,292	1,477	1,662	1,846
SB–250AIR	250	933	1,399	1,866	2,332	2,798	3,265	3,731	4,197	4,664

Size and component specification in this catalogue are subject to change without prior notice for quality improvement.
* Mark has been changed and updated.

AIR CYLINDER 90°

Scotch-Yoke Type

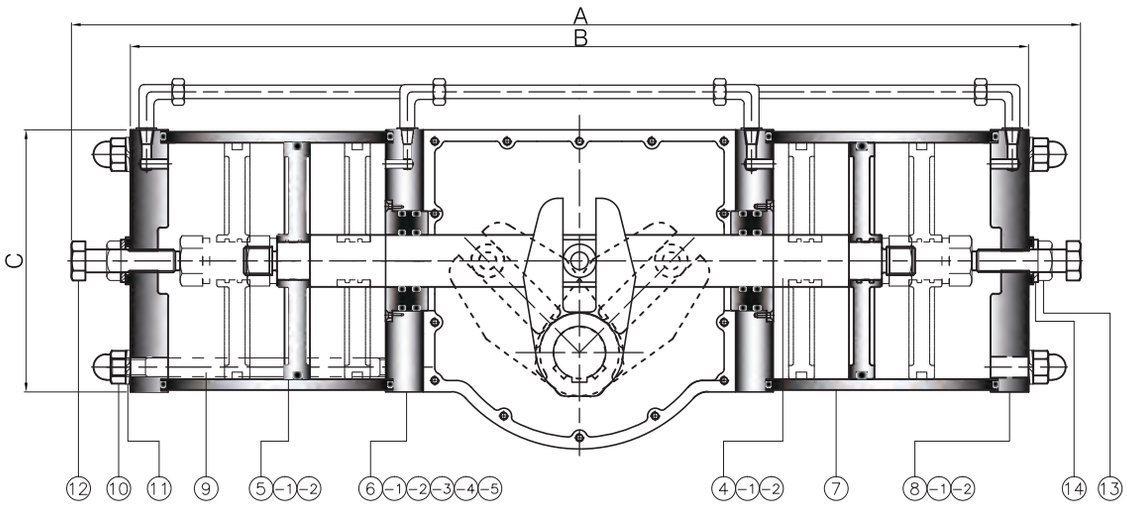

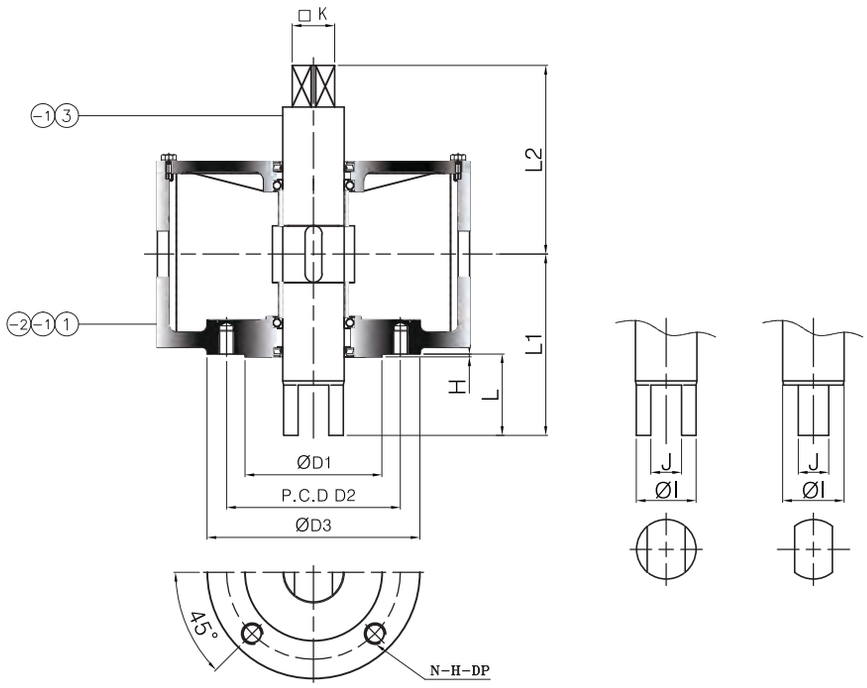

Dimension >>>

UNIT : mm

MODEL \ DIM	BASE PART						EXTERNAL PART								
	FLANGE	ØD1	P.C.D		ØD3	H	A	B	C	ØI	J	□K	L	L1	L2
			ØD2	N-H-DP											
SB-50AIR	F-10	70	102	4-M10-17	125	3	385	324	68	20	12	15	35	66	129
SB-80AIR	F-12	85	125	4-M12-20	150		560	476	107	34	16	21	50	118	186
SB-125AIR							655	563	155	39	16	25	65	163	202
SB-160AIR	F-14	100	140	4-M16-25	175		580	606	175	39	16	25	80	170	212
SB-200AIR	F-16	130	165	4-M20-30	210		820	704	216	39	16	25	95	205	218
SB-250AIR	F-25	200	254	8-M16-32	300		1170	1050	277	49	20	33	105	212	221

Size and component specification in this catalogue are subject to change without prior notice for quality improvement.
* Mark has been changed and updated.

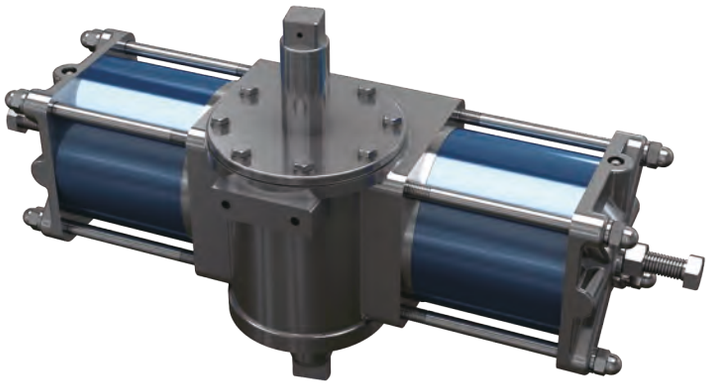

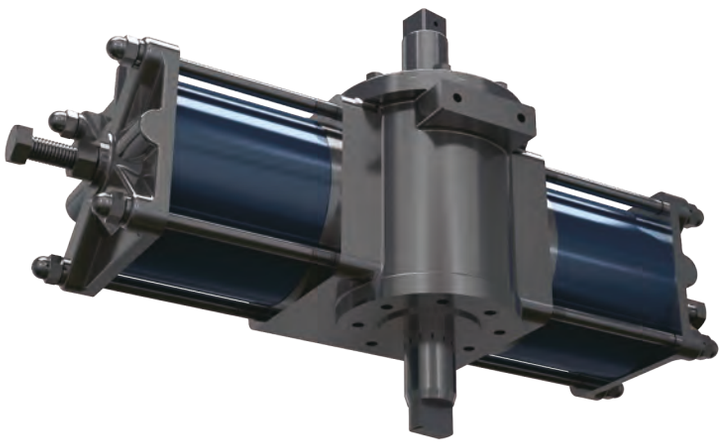

Global Leader
SAMBO
SPIRAL BEVEL GEAR ACTUATORS

The World's Highest Quality!

Part List >>>

MATERIAL ACCORDING TO ASTM			
NO	PART NAME	MATERIAL	REMARK
1	Body	AC4C	
–1	O–Ring	Silicon	
–2	Du–Bush	BSC2	
2	Body–Cover	AC4C	
–1	O–Ring	Silicon	
–2	O–Ring	Silicon	
–3	Du–Bush	BSC2	
–4	HEX. Bolt	SUS304	
–5	Spring Washer	SUS304	
3	STEM	A576–1045	
–1	Key	A576–1045	
4	Rack	A576–1045	
–1	HEX. Nut	SUS304	
–2	Spring Washer	SUS304	
5	Piston	AC4C	
–1	O–Ring	Silicon	
–2	O–Ring	Silicon	
6	Pipe Cap	AC4C	
–1	O–Ring	Silicon	
–2	O–Ring	Silicon	
–3	O–Ring	Silicon	
–4	O–Ring	Silicon	
–5	Du–Bush	BSC2	
7	Cylinder Tube	A120	
8	Pipe Cover	AC4C	
–1	O–Ring	Silicon	
–2	O–Ring	Silicon	
9	Rod Bolt	A576–1045	
10	Cap Nut	A576–1045	
11	Spring Washer	A576–1045	
12	HEX. Bolt	SUS304	
13	HEX. Nut	SUS304	
14	Plane Washer	SUS304	

Selection Chart >>>

MODEL	Double Acting 1/4 Turn Actuators									
	Diameter of Cylinder (mm)	Torque Capacity (N · m)								
		2bar	3bar	4bar	5bar	6bar	7bar	8bar	9bar	10bar
SB–50AIR	50	10	14	19	24	29	34	38	43	48
SB–80AIR	80	39	59	79	98	118	138	158	177	197
SB–125AIR	125	108	162	216	270	325	379	433	487	541
SB–160AIR	160	201	301	402	502	603	703	804	904	1,004
SB–200AIR	200	369	554	739	923	1,108	1,292	1,477	1,662	1,846
SB–250AIR	250	933	1,399	1,866	2,332	2,798	3,265	3,731	4,197	4,664

Size and component specification in this catalogue are subject to change without prior notice for quality improvement.
* Mark has been changed and updated.

Lubrication >>>

Sambo gears are grease packed with Zenith EPSB 2 having a temperature range of -20° C to +200° C. (-4° F to +392° F)
All O-Rings and seals are Buna N as standard : All units are rated IP67 suitable for temporary submergence.

High Temperature Option >>>

For higher temperatures, Sambo uses shell Darina R2, providing a temperature range of -10° C to +200° C. (+14F to +392° F)
O-Rings and Seals are Viton Grade V75.

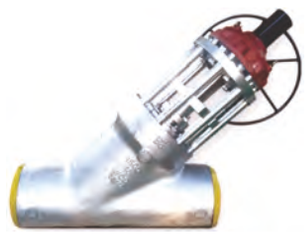

Low Temperature Option >>>

For low temperatures, Sambo uses Zenith SBLT600 grease providing a temperature range of -60° C to +120° C. (-76° F to +248° F)
O-Rings and Seals are fluoro silicone.
Housing, Base and end caps are carbon steel, grade A352 LCB.

Painting >>>

All gears are primer coated VP134 Red epoxy primer.

Option >>>

Sambo can meet most any other customer requirements as necessary contact us with exact specifications before palcing order.

Marine Duty >>>

Sambo has been providing product to the Marine Industry for many years our standard Marine product is
furnished as follows :
Lubricant is Zenith EPSB 2 with an operating temperature of -20° C to +200° C. (-4° F to +392° F).
All fasteners are zinc plated or anti-corrosive.
Input shafts are hard nickel plated.
All castings are ductile iron, grade FCD-450.
Certain options such as dial indicatiors and etc. may not be suitable for this service.

Size and component specitication in this catalogue are subject to change without prior notice for quality improvement.
* Mark has been changed and updated.

Global Leader
SAMBO
GEAR ACTUATORS for Industrial Valves

AWWA Standard (American Water Works Association), Standard C504 >>>

To meet this standard, all worm gears are aluminum bronze.
For buried service applications, input shafts are bright zinc plated.

Nuclear Service >>>

Sambo, with client' s approval, can meet most requirements for this special service, such as material grades, special coatings and etc. Qualifications will be justified by calculations.

Raw Sewage >>>

Units supplied for immersion in raw sewage are lubricated with the 751 grease and have special sealing to meet IP68 submersible ratings.
Input shafts are stainless steel.
Special coatings such as polyurethane, epoxy, and chlorinated rubber can be supplied based on the client specification.
Certain options such as dial indicators and etc. may not be suitable for this service.






Size and component specification in this catalogue are subject to change without prior notice for quality improvement.
* Mark has been changed and updated.

User's Manual

SAMBO Service SBWG Worm Gears Recommended Installation and Maintenance

The SAMBO range of Worm Gear Operators is supplied in accordance with the purchase order requirements.
The output drive bushing is normally supplied blank, unless specified otherwise on the purchase order.
In the event, SAMBO is requested to machine the bushing, a drawing of the required bore & keyway sizes should accompany the order.
Also the location of the keyway, in relation to the valve stem key position should be included.
All units are supplied with a clockwise input and clockwise output as standard unless notify to do.
The bushing is removable bottom of the unit, it is secured in the drive sleeve by means of retaining ring.
SAMBO to state the tool required for removal ··· need more complete informations.

Handling of Units >>>

All SBWG series Worm Gears are furnished with two eye bolts installed in the covers.
These may be used be lift to units from the shipping crates.
[CAUTION] The eye bolts are not designed to lift a complete valve/actuator package.
Doing so could cause serious personal injury and damage to the gear actuator.
Upon receipt and before mounting to the valve, units should be stored in a dry place, preferably on a storage shelf.

Mounting to the Valve >>>

Before mounting, check to see that the bushing has been machined and mounting base conforms to the purchase order requirements. Place the valve in either to Open or Close position.
Through use of the handwheel, position the gear actuator is the same position using the dial pointer as a guide.
Prior to mounting gear actuator to valve, it is recommended that a thin film of grease be applied to the valve flange.
This will help prevent corrosion of the valve flange surface and gear actuator mounting base.
Mounting gear actuator to valve and fasten with appropriate size mounting screw.
It is highly recommended that the mounting hardware be a minimum of Grade 8. (High Tensile)
Painting of the mounting screws is also recommended to avoid corrosion.
Operate the valve from full open to full close, by use of the handwheel or by motor actuator is supplied.
Should ant travel adjustment be required, the two stop screw on the side of the housing can provide final position control.
All units are suitable for +/-5℃ adjustment .

Maintenance >>>

All units are lubricated for life. Under normal operating conditions, no maintenance if required.
The units are completely sealed with large cross-selection O-Rings to prevent any leakage.
Units are suitable for temporary submergence to IP67.
SAMBO standard lubricant is shell Zenith EPSB 2, which is suitable for ambient temperatures of -20° C to +200° C. (-4° F to +392° F)
Other lubricants are available : must be determined at time of order.
Each unit is supplied with a grease fitting if additional lubricant is required.
Periodic inspection is suggested to determine if any leaks have occurred.
External surfaces should also be examined, and if necessary, touch up painting is recommended.

Spare Parts >>>

In the event any spare (replacement) parts are required, refer to the parts list supplied with the order,
or contact SAMBO directly for assistance.
Always provide the nameplate information when ordering parts.

Summary >>>

This manual intends that SAMBO' s clients use rightly & safely.

Size and component specification in this catalogue are subject to change without prior notice for quality improvement.
* Mark has been changed and updated.

Global Leader
SAMBO
GEAR ACTUATORS for Industrial Valves

The World's Highest Quality!

Inspection >>>

- Receiving the goods, check the status of the goods.
  (If it has any problem, feel free to contact us.)
- Looking through the model, Ratio, Manufactured NO., and the rest on the plate whether corresponds with your order particulars or not. If it has any problem, feel free to contact us directly for assistance. Always provide the nameplate information when ordering parts.

Instruction >>>

- **Storage**

For best results, SAMBO operations should be stored in a clean, dry area in their shipping containers. If operators are stored in high humidity areas, steps should be taken to reduce the amount of moisture.
Input shafts are plated to prevent corrosion. If operators are being stored for a long period of time, operator mounting surfaces should be lightly greased to prevent corrosion.

- **Maintenance**

SAMBO manual operators do not require periodic maintenance. They are, for most applications, lubricated for life, with all components designed to have a life equal to or exceeding the wear life of operator gearing.

Installation >>>

- Move the valve in the closed position and insure valve seal has been attained.
- Install the Yoke Nut Driver on the bottom of the bevel gear using the bolt pattern supplied.
- Before installing the operator, liberally grease the Yoke Nut and the Yoke Nut Driver. This will reduce the possibility of corrosion between the two components.
- Align the operator with the Yoke Nut and lower the operator into position on the valve flange or mounting kit.
- Install and tighten the valve to operator mounting bolts.
- Rotate the operator handwheel counterclockwise moving the valve from the close to the open position checking to make sure the operator turns smoothly through the complete cycle. Visually verify that the open position has been achieved.
- Rotate the valve from close to open several times to insure proper operation.

Precautions >>>

- When it replaces to be gear, shaft & cover, necessarily contact us.
- Without any instruction from SAMBO, it could cause severe damage..

Basic Check >>>

Article	Contents	Period
Gear & Bearing	noise	per 6month
Grease	volume of grease	per 6month
Oilseal	oil leak	per 6month

- Check ordinarly the stated below in order to avoid breaking down the unit.

Trouble Shooting >>>

CAUSE	COUNTERPLAN
percolation of impurity	removal of clean
abrasion of gear	replacement
abrasion of bearing	replacement
loose of tightening up position	tightening up
breakage of oilseal	replacement
shortage of grease	filling up of grease

Size and component specitication in this catalogue are subject to change without prior notice for quality improvement.
* Mark has been changed and updated.

Spiral Bevel Gear Actuators

Model	Ratio	Max. Thrust Capacity (KN)	Max. Output Torque (N · m)	Max. Output Torque (Ft · lbf)	Mechanical Advantage (±10%)	Max. Input Torque (N · m)	Bore Diameter (Stem. Max) TW	Bore Diameter (Stem. Max) KEY	Mounting Flange (ISO5210/1)
SB-VS10	2.5:1	75.5	220	162	2.4	92.6	30	22 (8x7)	F-10 F-07 (OPTION)
SB-VS10-1S	5:1				4.6	47.7			
SB-MT-VS10	1:1				0.9	243.8			
SB-VS10C	2.5:1		330	243	2.4	137.5	Ø42		F-14, F-16
SB-VS10C-1S	5:1				4.6	71.7			
SB-VS20	3:1	113	370	273	2.9	129.8	40	32 (10x8)	F-12 F-10 (OPTION)
SB-VS20-1S	6:1				5.5	66.9			
SB-MT-VS20	1:1				0.9	410			
SB-VS20C	3:1		555	409	2.9	191.3	Ø50		F-16, (F-20)
SB-VS20C-1S	6:1				5.5	100.9			
SB-V0	3.25:1	127	600	443	3.1	194.3	46	38 (12x8)	F-14 F-12 (OPTION) F-10
SB-V0W									
SB-V0-1S	6.5:1				6	100.2			
SB-V0W-1S									
SB-V0-1ST	P-3.25:1				3.3	180.5			
	S-6.5:1				6.0	100.2			
SB-V0-1S2B	13:1				11.4	52.7			
SB-V0-1SD	20.86:1				18.7	32.1			
SB-V0W-1SD									
SB-V0-1SDT	P-6.5:1				5.9	102.3			
	S-20.86:1				18.7	32.1			
SB-MT-V0	1:1				0.9	664.8			
SB-V0-2B	6.5:1				5.9	102.3			
SB-V0W-2B									
SB-V0C	3.25:1		900	663	3.1	290.3	Ø60		F-16, (F-20)
SB-V0C-1S	6.5:1				5.9	152.5			
SB-V1	3.5:1	141	980	723	3.3	294.7	55	45 (14x9)	F-16 F-14 (OPTION)
SB-V1W									
SB-V1-1S	7:1				6.3	155.1			
SB-V1W-1S									
SB-V1-1ST	P-3.5:1				3.2	310.2			
	S-7:1				6.3	155.1			
SB-V1-1S2B	14:1				12	81.6			
SB-V1-1SD	22.46:1				20.2	48.5			
SB-V1W-1SD									
SB-V1-1SDT	P-7:1				6.3	155.1			
	S-22.46:1				20.2	48.5			
SB-MT-V1	1:1				0.9	1085.9			
SB-V1-2B	7:1				6.3	155.1			
SB-V1W-2B									
SB-V1C	3.5:1		1470	1084	3.3	445.4	Ø69		(F-20), F-25
SB-V1C-1S	7:1				6.3	233.3			

Remark

- Ratio & Base specification to be changeable.
- Max Output Torque includes safety factor.
- If any request requirement, please contact us any time.

Size and component specification in this catalogue are subject to change without prior notice for quality improvement.

Model	Ratio	Max. Thrust Capacity (KN)	Max. Output Torque		Mechanical Advantage (±10%)	Max. Input Torque (N · m)	Bore Diameter (Stem. Max)		Mounting Flange (ISO5210/1)
			(N · m)	(Ft · lbf)			TW	KEY	
SB–V2	4:1	190	1500	1106	3.8	394.7	62	52 (16x10)	(F–20) F–14,F–16 (OPTION)
SB–V2W									
SB–V2–1S	10.13 :1				9.3	160.6			
SB–V2W–1S									
SB–V2–1ST	P–4:1				3.7	406.9			
	S–10.13:1				9.3	160.6			
SB–V2–1S2B	20.27 :1				17.7	84.5			
SB–V2–1SD	25.67 :1				23.7	63.4			
SB–V2W–1SD									
SB–V2–1SDT	P–10.13:1				9.3	160.6			
	S–25.67:1				23.7	63.4			
SB–MT–V2	1:1				0.92	1627.8			
SB–V2–2B	10:1				9	166.2			
SB–V2W–2B									
SB–V2C	4:1		2250	1659	3.8	592.1	Ø78		F–25, F–30
SB–V2C–1S	10.13 :1				9.3	241.9			
SB–V2H	4:1	1080	2900	2139	3.8	763.2	65	55 (16x10)	F–25 (F–20) (OPTION)
SB–V2HW									
SB–V2H–1S	10.13 :1				9.3	310.6			
SB–V2HW–1S									
SB–V2H–1ST	P–4:1				3.7	786.8			
	S–10.13:1				9.3	310.6			
SB–V2H–1SD	25.67 :1				23.7	122.6			
SB–V2HW–1SD									
SB–V2H–1SDT	P–10.13:1				9.3	310.6			
	S–25.67:1				23.7	122.6			
SB–V2H–2B	10:1				9	321.3			
SB–V2HW–2B									
SB–V3	5:1	288	2500	1844	4.8	526.3	72	60 (18x11)	F–25 (F–20),F–16 (OPTION)
SB–V3W									
SB–V3–1S	12.67 :1				11.7	214.2			
SB–V3W–1S									
SB–V3–1ST	P–5:1				4.6	542.6			
	S–12.67:1				11.7	214.2			
SB–V3–1S2B	25.33 :1				22.2	112.7			
SB–V3–1SD	32.1 :1				29.6	84.5			
SB–V3W–1SD									
SB–V3–1SDT	P–12.67:1				11.7	214.2			
	S–32.08:1				29.6	84.5			
SB–MT–V3	1:1				0.92	2713			
SB–V3–2B	15:1				13.5	184.7			
SB–V3W–2B									
SB–V3C	5:1		3750	2765	4.8	781.2	Ø97		F–30, F–35
SB–V3C–1S	12.67 :1				11.7	320.5			
SB–V3H	5:1	1710	4500	3319	4.8	947.4	80	70 (20x12)	F–30 F–25(OPTION)
SB–V3HW									
SB–V3H–1S	12.67 :1				11.7	385.5			
SB–V3HW–1S									
SB–V3H–1ST	P–5:1				4.6	976.7			
	S–12.67:1				11.7	385.5			
SB–V3H–1SD	32.1 :1				29.6	152.2			
SB–V3HW–1SD									
SB–V3H–1SDT	P–12.67:1				11.7	385.5			
	S–32.08:1				29.6	152.2			
SB–V3H–2B	15:1				13.5	332.4			
SB–V3HW–2B									

Remark	
	• Ratio & Base specification to be changeable.
	• Max Output Torque includes safety factor.
	• If any request requirement, please contact us any time.

Size and component specification in this catalogue are subject to change without prior notice for quality improvement.

TECHNICAL DATA

Model	Ratio	Max. Thrust Capacity (KN)	Max. Output Torque		Mechanical Advantage (±10%)	Max. Input Torque (N · m)	Bore Diameter (Stem. Max)		Mounting Flange (ISO5210/1)
			(N · m)	(Ft · lbf)			TW	KEY	
SB–V35	5.5:1	350	3500	2581	5.2	669.9	85	72 (20x12)	F–30 F–25 (OPTION)
SB–V35W									
SB–V35–1S	16.5:1				15.2	230.2			
SB–V35W–1S									
SB–V35–1ST	P–5.5:1				5.1	690.6			
	S–16.5:1				15.2	243.1			
SB–V35–1S2B	41.25:1				36.1	96.9			
SB–V35–1SD	49.5:1				45.6	76.7			
SB–V35W–1SD									
SB–V35–1SDT	P–16.5:1				15.2	230.2			
	S–49.5:1				45.6	76.7			
SB–MT–V35	1:1				0.92	3798.2			
SB–V35–2B	17.88 :1				16.1	217			
SB–V35W–2B									
SB–V35C	5.5:1		5250	3872	5.2	1009.6	Ø115		F–35, F–40
SB–V35C–1S	16.5:1				15.2	345.3			
SB–V35H	5.5:1	2450	7000	5163	5.2	1339.7	95	85 (22x14)	F–35 F–30,F–25 (OPTION)
SB–V35HW									
SB–V35H–1S	16.5:1				15.2	460.4			
SB–V35HW–1S									
SB–V35H–1ST	P–5.5:1				5.1	1381.1			
	S–16.5:1				15.2	460.4			
SB–V35H–1SD	49.5:1				45.6	153.5			
SB–V35HW–1SD									
SB–V35H–1SDT	P–16.5:1				15.2	460.4			
	S–49.5:1				45.6	153.5			
SB–V35H–2B	17.88 :1				16.1	433.9			
SB–V35HW–2B									
SB–V4	6:1	400	5200	3835	5.7	912.3	98	84 (22x14)	F–35 F–30,F–25 (OPTION)
SB–V4W									
SB–V4–1S	18:1				16.6	313.5			
SB–V4W–1S									
SB–V4–1ST	P–6:1				5.5	940.5			
	S–18:1				16.6	313.5			
SB–V4–1S2B	45:1				39.4	132			
SB–V4–1SD	54:1				49.8	104.5			
SB–V4W–1SD									
SB–V4–1SDT	P–18:1				16.6	313.5			
	S–54:1				49.8	104.5			
SB–MT–V4	1:1				0.92	5643			
SB–V4–2B	21:1				19	274.4			
SB–V4W–2B									
SB–V4C	6:1		7800	5752	5.7	1368.4	Ø130		F–35, F–40
SB–V4C–1S	18:1				16.6	469.8			
SB–V4H	6:1	2900	9800	7228	5.7	1719.3	110	95 (25x14)	F–35 F–30,F–25 (OPTION)
SB–V4HW									
SB–V4H–1S	18:1				16.6	590.8			
SB–V4HW–1S									
SB–V4H–1ST	P–6:1				5.5	1772.5			
	S–18:1				16.6	590.8			
SB–V4H–1SD	54:1				49.8	196.9			
SB–V4HW–1SD									
SB–V4H–1SDT	P–18:1				16.6	590.8			
	S–54:1				49.8	196.9			
SB–V4H–2B	21:1				19	517.1			
SB–V4HW–2B									
Remark	• Ratio & Base specification to be changeable. • Max Output Torque includes safety factor. • If any request requirement, please contact us any time.								

Size and component specitication in this catalogue are subject to change without prior notice for quality improvement.

Model	Ratio	Max. Thrust Capacity (KN)	Max. Output Torque		Mechanical Advantage (±10%)	Max. Input Torque (N · m)	Bore Diameter (Stem. Max)		Mounting Flange (ISO5210/1)
			(N · m)	(Ft · lbf)			TW	KEY	
SB–V5	6.56:1	510	7800	5753	6.2	1252.5	110	95 (28x16)	F–35 F–30, F–25 (OPTION)
SB–V5W									
SB–V5–1S	22.9444:1				21.1	368.9			
SB–V5W–1S									
SB–V5–1ST	P–6.556:1				6	1291.2			
	S–22.94:1				21.1	368.9			
SB–V5–1S2B	57.36:1				41.5	187.9			
SB–V5–1SD	80.31:1				74	105.4			
SB–V5W–1SD									
SB–V5–1SDT	P–22.94:1				21.1	368.9			
	S–80.31:1				74	105.4			
SB–MT–V5	1:1				0.9	8464.5			
SB–V5–2B	26.2222:1				23.7	329.6			
SB–V5W–2B									
SB–V5C	6.5:1		11700	8929	6.2	1887	145		F–40, F–35
SB–V5C–1S	19.5:1				21.1	554.5			
SB–V5H	6.55556:1	3500	15000	11063	6.2	2408.6	130	115 (32x18)	F–40 F–35, F–30 (OPTION)
SB–V5HW									
SB–V5H–1S	22.9444:1				21.1	709.4			
SB–V5HW–1S									
SB–V5H–1ST	P–6.556:1				6	2483.1			
	S–22.94:1				21.1	709.4			
SB–V5H–1SD	80.31:1				74	202.7			
SB–V5HW–1SD									
SB–V5H–1SDT	P–22.94:1				21.1	709.4			
	S–580.31:1				74	202.7			
SB–V5H–2B	26.2222:1				23.7	633.8			
SB–V5HW–2B									
SB–V55	7:1	1500	10400	7671	6.7	1563.9	120	105 (28x16)	F–40 F–35, F–30 (OPTION)
SB–V55W									
SB–V55–1S	24.5:1				22.6	460.7			
SB–V55W–1S									
SB–V55–1ST	P–7:1				6.5	1612.3			
	S–24.5:1				22.6	460.7			
SB–V55–1S2B	61.25:1				53.6	194			
SB–V55–1SD	85.75:1				79	131.6			
SB–V55W–1SD									
SB–V55–1SDT	P–24.5:1				22.6	460.7			
	S–85.75:1				79	131.6			
SB–MT–V55	1:1				0.9	11555			
SB–V55–2B	35:1				31.6	329.6			
SB–V55W–2B									
SB–V55H	7:1	4200	19000	14014	6.7	2857.1	140	120 (32x18)	F–48 F–40, F–35 (OPTION)
SB–V55HW									
SB–V55H–1S	24.5:1				22.6	841.6			
SB–V55HW–1S									
SB–V55H–1ST	P–7:1				6.5	2945.5			
	S–24.5:1				22.6	841.6			
SB–V55H–1SD	85.75:1				79	240.4			
SB–V55HW–1SD									
SB–V55H–1SDT	P–24.5:1				22.6	841.6			
	S–85.75:1				79	240.4			
SB–V55H–2B	35:1				31.6	601.5			
SB–V55HW–2B									
Remark	• Ratio & Base specification to be changeable. • Max Output Torque includes safety factor. • If any request requirement, please contact us any time.								

Size and component specification in this catalogue are subject to change without prior notice for quality improvement.

TECHNICAL DATA

Model	Ratio	Max. Thrust Capacity (KN)	Max. Output Torque		Mechanical Advantage (±10%)	Max. Input Torque (N · m)	Bore Diameter (Stem. Max)		Mounting Flange (ISO5210/1)
			(N · m)	(Ft · lbf)			TW	KEY	
SB–V6	7:1	2310	13000	9588	6.7	1954.9	130	115 (32x18)	F–40 F–35, F–30 (OPTION)
SB–V6W									
SB–V6–1S	28:1				25.8	503.8			
SB–V6W–1S									
SB–V6–1ST	P–7:1				6.5	2015.3			
	S–28:1				25.8	503.8			
SB–V6–1S2B	84:1				73.5	176.8			
SB–V6–1SD	112:1				103.2	126			
SB–V6W–1SD									
SB–V6–1SDT	P–28:1				25.8	503.8			
	S–112:1				103.2	126			
SB–MT–V6	1:1				0.9	14107.4			
SB–V6–2B	35:1				31.6	411.6			
SB–V6W–2B									
SB–V6H	7:1	4700	23000	16964	6.7	3458.6	150	130 (36x20)	F–48 F–40, F–35 (OPTION)
SB–V6HW									
SB–V6H–1S	28:1				25.8	891.4			
SB–V6HW–1S									
SB–V6H–1ST	P–7:1				6.5	3565.6			
	S–28:1				25.8	891.4			
SB–V6H–1SD	112:1				103.2	222.9			
SB–V6HW–1SD									
SB–V6H–1SDT	P–28:1				25.8	891.4			
	S–112:1				103.2	222.9			
SB–V6H–2B	35:1				31.6	728.1			
SB–V6HW–2B									
SB–V7	7.56 :1	2500	17600	12981	7.2	2452	150	130 (36x20)	F–48 F–40, F–35 (OPTION)
SB–V7W									
SB–V7–1S	30.22 :1				27.8	632			
SB–V7W–1S									
SB–V7–1ST	7.56 :1				7	2527.8			
	30.22 :1				27.8	632			
SB–V7–1S2B	90.67 :1				79.4	221.7			
SB–V7–1SD	120.89 :1				111.4	158			
SB–V7W–1SD									
SB–V7–1SDT	30.22 :1				27.8	632			
	120.89 :1				111.4	158			
SB–V7–2B	37.78 :1				34.1	516.2			
SB–V7W–2B									
SB–V7H	7.56 :1	5200	37000	27290	7.2	5154.8	170	150 (40x22)	F–48
SB–V7HW									
SB–V7H–1S	30.22 :1				27.8	1328.6			
SB–V7HW–1S									
SB–V7H–1ST	7.56 :1				7	5314.2			
	30.22 :1				27.8	1328.6			
SB–V7H–1SD	120.89 :1				111.4	332.1			
SB–V7HW–1SD									
SB–V7H–1SDT	30.22 :1				27.8	1328.6			
	120.89 :1				111.4	332.1			
SB–V7H–2B	37.78 :1				34.1	1085.2			
SB–V7HW–2B									
Remark	• Ratio & Base specification to be changeable. • Max Output Torque includes safety factor. • If any request requirement, please contact us any time.								

Size and component specitication in this catalogue are subject to change without prior notice for quality improvement.

Model	Ratio	Max. Thrust Capacity (KN)	Max. Output Torque		Mechanical Advantage (±10%)	Max. Input Torque (N · m)	Bore Diameter (Stem. Max)		Mounting Flange (ISO5210/1)
			(N · m)	(Ft · lbf)			TW	KEY	
SB-V75	8:1	3450	21000	15489	7.6	2763.2	160	140 (36x20)	F-48 F-40 (OPTION)
SB-V75W									
SB-V75-1S	40:1				36.9	569.7			
SB-V75W-1S									
SB-V75-1ST	8:1				7.4	2848.6			
	40:1				36.9	569.7			
SB-V75-1S2B	160:1				140.1	149.9			
SB-V75-1SD	200:1				184.3	113.9			
SB-V75W-1SD									
SB-V75-1SDT	40:1				36.9	569.7			
	200:1				184.3	113.9			
SB-V75-2B	37.78:1				34.1	615.9			
SB-V75W-2B									
SB-V75H	8:1	6800	46000	33928	7.6	6052.6	190	170 (40x22)	F-60 F-48 (OPTION)
SB-V75HW									
SB-V75H-1S	40:1				36.9	1248			
SB-V75HW-1S									
SB-V75H-1ST	8:1				7.4	6239.8			
	40:1				36.9	1248			
SB-V75H-1SD	200:1				184.3	249.6			
SB-V75HW-1SD									
SB-V75H-1SDT	40:1				36.9	1248			
	200:1				184.3	249.6			
SB-V75H-2B	37.78:1				34.1	1349.2			
SB-V75HW-2B									
SB-V8	8:1	4100	32000	23602	7.6	4210.5	180	160 (40x22)	F-48 F-40 (OPTION)
SB-V8W									
SB-V8-1S	40:1				36.9	868.1			
SB-V8W-1S									
SB-V8-1ST	P-8:1				7.4	4340.7			
	S-40:1				36.9	868.1			
SB-V8-1S2B	160:1				140.1	228.5			
SB-V8-1SD	200:1				184.3	173.6			
SB-V8W-1SD									
SB-V8-1SDT	P-40:1				36.9	868.1			
	S-200:1				184.3	173.6			
SB-V8-2B	44:1				39.7	805.8			
SB-V8W-2B									
SB-V8H	8:1	7650	58000	42778	7.6	7631.6	215	185 (45x25)	F-60 F-48 (OPTION)
SB-V8HW									
SB-V8H-1S	40:1				36.9	1573.5			
SB-V8HW-1S									
SB-V8H-1ST	P-8:1				7.4	7867.6			
	S-40:1				36.9	1573.5			
SB-V8H-1SD	200:1				184.3	314.7			
SB-V8HW-1SD									
SB-V8H-1SDT	P-40:1				36.9	1573.5			
	S-200:1				184.3	314.7			
SB-V8H-2B	44:1				39.7	1460.6			
SB-V8HW-2B									
Remark	• Ratio & Base specification to be changeable. • Max Output Torque includes safety factor. • If any request requirement, please contact us any time.								

Size and component specification in this catalogue are subject to change without prior notice for quality improvement.

TECHNICAL DATA

Model	Ratio	Max. Thrust Capacity (KN)	Max. Output Torque		Mechanical Advantage (±10%)	Max. Input Torque (N · m)	Bore Diameter (Stem. Max)		Mounting Flange (ISO5210/1)
			(N · m)	(Ft · lbf)			TW	KEY	
SB-V85	8:1	5150	40000	29502	7.6	5263.2	190	170 (40x22)	F-60 F-48 (OPTION)
SB-V85W									
SB-V85-1S	40:1				36.9	1085.2			
SB-V85W-1S									
SB-V85-1ST	P-8:1				7.4	5425.9			
	S-40:1				36.9	1085.2			
SB-V85-1S2B	200:1				175.1	228.5			
SB-V85-1SD	200:1				184.3	217			
SB-V85W-1SD									
SB-V85-1SDT	P-40:1				36.9	1085.2			
	S-200:1				184.3	217			
SB-V85-2B	48:1				43.3	923.4			
SB-V85W-2B									
SB-V85H	8:1	9100	74000	54579	7.6	9736.8	225	195 (45x25)	F-60 F-48 (OPTION)
SB-V85HW									
SB-V85H-1S	40:1				36.9	2007.6			
SB-V85HW-1S									
SB-V85H-1ST	P-8:1				7.4	10038			
	S-40:1				36.9	2007.6			
SB-V85H-1SD	200:1				184.3	401.5			
SB-V85HW-1SD									
SB-V85H-1SDT	P-40:1				36.9	2007.6			
	S-200:1				184.3	401.5			
SB-V85H-2B	48:1				43.3	1708.2			
SB-V85HW-2B									
SB-V9	8:1	5450	55000	40566	7.6	7236.8	200	180 (45x25)	F-60 F-48 (OPTION)
SB-V9W									
SB-V9-1S	40:1				36.9	1492.1			
SB-V9W-1S									
SB-V9-1ST	P-8:1				7.4	7460.7			
	S-40:1				36.9	1492.1			
SB-V9-1S2B	200:1				175.1	314.1			
SB-V9-1SD	200:1				184.3	298.4			
SB-V9W-1SD									
SB-V9-1SDT	P-40:1				36.9	1492.1			
	S-200:1				184.3	298.4			
SB-V9-2B	52.43:1				46.9	1172			
SB-V9W-2B									
SB-V9H	8:1	9400	104000	76706	7.6	13684.2	240	215 (50x28)	(F-80) F-60 (OPTION)
SB-V9HW									
SB-V9H-1S	40:1				36.9	2821.5			
SB-V9HW-1S									
SB-V9H-1ST	P-8:1				7.4	14107.4			
	S-40:1				36.9	2821.5			
SB-V9H-1SD	200:1				184.3	564.3			
SB-V9HW-1SD									
SB-V9H-1SDT	P-40:1				36.9	2821.5			
	S-200:1				184.3	564.3			
SB-V9H-2B	52.43:1				46.9	2216.1			
SB-V9HW-2B									
Remark	• Ratio & Base specification to be changeable. • Max Output Torque includes safety factor. • If any request requirement, please contact us any time.								

Size and component specitication in this catalogue are subject to change without prior notice for quality improvement.

Model	Ratio	Max. Thrust Capacity (KN)	Max. Output Torque		Mechanical Advantage (±10%)	Max. Input Torque (N · m)	Bore Diameter (Stem. Max)		Mounting Flange (ISO5210/1)
			(N · m)	(Ft · lbf)			TW	KEY	
SB–V10	8:1	7300	75000	55317	7.6	9868.4	220	200 (50x28)	(F–80) F–60 (OPTION)
SB–V10W									
SB–V10–1S	40:1				36.9	2034.7			
SB–V10W–1S									
SB–V10–1ST	P–8:1				7.4	10173.6			
	S–40:1				36.9	2034.7			
SB–V10–1S2B	220:1				192.6	389.4			
SB–V10–1SD	200:1				184.3	406.9			
SB–V10W–1SD									
SB–V10–1SDT	P–40:1				36.9	2034.7			
	S–200:1				184.3	406.9			
SB–V10–2B	56:1				50.5	1484.0			
SB–V10W–2B									
SB–V10H	8:1	11500	142000	104734	7.6	18684.2	270	240 (56x32)	
SB–V10HW									
SB–V10H–1S	40:1				36.9	3852.4			
SB–V10HW–1S									
SB–V10H–1ST	P–8:1				7.4	19262.1			
	S–40:1				36.9	3852.4			
SB–V10H–1SD	200:1				184.3	770.5			
SB–V10HW–1SD									
SB–V10H–1SDT	P–40:1				36.9	3852.4			
	S–200:1				184.3	770.5			
SB–V10H–2B	56:1				50.5	2809.7			
SB–V10HW–2B									

Remark	
	• Ratio & Base specification to be changeable.
	• Max Output Torque includes safety factor.
	• If any request requirement, please contact us any time.

Size and component specitication in this catalogue are subject to change without prior notice for quality improvement.

Spur Gear Actuators

Model	Ratio	Max. Thrust Capacity (KN)	Max. Output Torque		Mechanical Advantage (±10%)	Max. Input Torque (N · m)	Bore Diameter (Stem, Max)		Mounting Flange (ISO5210/1)
			(N · m)	(Ft · lbf)			TW	KEY	
SB–SR50	10:1	113	370	273	9.2	40.2	40	32 (10x8)	F–12 F–10 (OPTION)
SB–SR50–2B	20:1				16.6	22.3			
SB–SR50–1ST	P–10:1				8.5	43.7			
	S–20:1				16.9	21.9			
SB–SR100	12:1	141	980	723	11	88.8	55	45 (14x9)	F–16 F–14 (OPTION)
SB–SR100–2B	24:1				19.9	49.3			
SB–SR100–1ST	P–12:1				10.2	96.5			
	S–24:1				20.3	48.2			
SB–SR200	12:1	190	1500	1106	11	135.9	62	52 (16x10)	(F–20) F–16,F–14 (OPTION)
SB–SR200–2B	30:1				24.8	60.4			
SB–SR200–1ST	P–12:1				10.2	147.7			
	S–30:1				25.4	59.1			
SB–SR200H	12:1	1080	2900	2139	11	262.7	65	55 (16x10)	F–25 (F–20) (OPTION)
SB–SR200H–2B	30:1				24.8	116.7			
SB–SR200H–1ST	P–12:1				10.2	285.5			
	S–30:1				25.4	114.2			
SB–SR300	13:1	288	2500	1844	12	209	72	60 (18x11)	F–25 (F–20), F–16 (OPTION)
SB–SR300–2B	32:1				26.5	94.4			
SB–SR300–1ST	P–13:1				11.0	227.2			
	S–33:1				27.9	89.5			
SB–SR300H	13:1	1710	4500	3319	12	376.3	80	70 (20x12)	F–30 F–25 (OPTION)
SB–SR300H–2B	32:1				26.5	169.8			
SB–SR300H–1ST	P–13:1				11	409			
	S–33:1				27.9	161.1			
SB–SR350	13:1	350	3500	2581	12.0	292.6	85	72 (20x12)	F–30 F–25 (OPTION)
SB–SR350–2B	39:1				32.3	108.4			
SB–SR350–1ST	P–13:1				11.0	318.1			
	S–39:1				33.0	106.0			
SB–SR350H	13:1	2100	7000	5163	12.0	585.3	85	72 (20x12)	F–30 F–25 (OPTION)
SB–SR350H–2B	39:1				32.3	216.8			
SB–SR350H–1ST	P–13:1				11.0	636.2			
	S–39:1				33.0	212.1			
SB–SR400	14:1	400	5200	3835	12.9	403.7	98	82 (22x14)	F–30 F–25 (OPTION)
SB–SR400–2B	42:1				34.8	149.5			
SB–SR400–1ST	P–14:1				11.8	438.8			
	S–42:1				35.5	146.3			
SB–SR400H	14:1	2450	9800	7228	12.9	760.9	95	85 (22x14)	F–35 F–30, F–25 (OPTION)
SB–SR400H–2B	42:1				34.8	281.8			
SB–SR400H–1ST	P–14:1				11.8	827			
	S–42:1				35.5	275.7			
SB–SR500	15:1	510	7800	5753	13.8	565.2	110	95 (28x16)	F–35 F–30 (OPTION)
SB–SR500–2B	60:1				49.7	157			
SB–SR500–1ST	P–15:1				12.7	614.4			
	S–45:1				38.1	204.8			

Remark

- Ratio & Base specification to be changeable.
- Max Output Torque includes safety factor.
- If any request requirement, please contact us any time.

Size and component specification in this catalogue are subject to change without prior notice for quality improvement.

Model	Ratio	Max. Thrust Capacity (KN)	Max. Output Torque		Mechanical Advantage (±10%)	Max. Input Torque (N · m)	Bore Diameter (Stem. Max)		Mounting Flange (ISO5210/1)
			(N · m)	(Ft · lbf)			TW	KEY	
SB–SR500H	15:1	2900	15000	11063	13.8	1087	110	95 (25x14)	F–35 F–30, F–25 (OPTION)
SB–SR500H–2B	60:1				49.7	301.9			
SB–SR500H–1ST	P–15:1				12.7	1181.5			
	S–45:1				38.1	393.8			
SB–SR550	15:1	1500	10400	7671	13.8	753.6	120	105 (28x16)	F–35 F–30, F–25 (OPTION)
SB–SR550–2B	60:1				49.7	209.3			
SB–SR550–1ST	P–15:1				12.7	819.2			
	S–52.5:1				44.4	234.0			
SB–SR550H	15:1	3400	19000	14014	13.8	1376.8	120	105 (28x16)	F–40 F–35,F–30 (OPTION)
SB–SR550H–2B	60:1				49.7	382.4			
SB–SR550H–1ST	P–15:1				12.7	1496.5			
	S–52.5:1				44.4	427.6			
SB–SR600	16:1	2310	13000	9588	14.7	883.2	130	115 (32x18)	F–40 F–35, F–30 (OPTION)
SB–SR600–2B	64:1				53	245.3			
SB–SR600–1ST	P–16:1				13.5	959.9			
	S–64:1				54.2	240			
SB–SR600H	16:1	3500	23000	16964	14.7	1562.5	130	115 (32x18)	F–40 F–35, F–30 (OPTION)
SB–SR600H–2B	64:1				53	434			
SB–SR600H–1ST	P–16:1				13.5	1698.4			
	S–64:1				54.2	424.6			
SB–SR700	17:1	2500	17600	12981	15.6	1125.3	150	130 (36x20)	F–48 F–40, F–35 (OPTION)
SB–SR700–2B	85:1				70.4	250.1			
SB–SR700–1ST	P–17:1				14.4	1223.2			
	S–68:1				57.6	305.8			
SB–SR700H	17:1	4700	37000	27290	15.6	2365.7	150	130 (36x20)	F–48 F–40, F–35 (OPTION)
SB–SR700H–2B	85:1				70.4	525.7			
SB–SR700H–1ST	P–17:1				14.4	2571.4			
	S–68:1				57.6	642.9			
SB–SR750	17:1	3450	21000	15489	15.6	1342.7	160	140 (36x20)	F–48
SB–SR750–2B	93.5:1				77.4	271.3			
SB–SR750–1ST	P–17:1				14.4	1459.5			
	S–85:1				71.9	291.9			
SB–SR750H	17:1	5000	46000	33928	15.6	2941.2	160	140 (36x20)	F–48
SB–SR750H–2B	93.5:1				77.4	594.2			
SB–SR750H–1ST	P–17:1				14.4	3196.9			
	S–85:1				71.9	639.4			
SB–SR800	17:1	4100	32000	23602	15.6	2046	180	160 (40x22)	F–48
SB–SR800–2B	93.5:1				77.4	413.3			
SB–SR800–1ST	P–17:1				14.4	2224			
	S–85:1				71.9	444.8			
SB–SR800H	17:1	5200	58000	42778	15.6	3708.4	170	150 (40x22)	F–48
SB–SR800H–2B	93.5:1				77.4	749.2			
SB–SR800H–1ST	P–17:1				14.4	4030.9			
	S–85:1				71.9	806.2			
Remark	• Ratio & Base specification to be changeable. • Max Output Torque includes safety factor. • If any request requirement, please contact us any time.								

Size and component specification in this catalogue are subject to change without prior notice for quality improvement.

Model	Ratio	Max. Output Torque (N · m)	Max. Output Torque (Ft · lbf)	Mechanical Advantage (±10%)	Max. Input Torque (N · m)	Turns to Close (REV)	Bore Diameter (Stem, Max)	Mounting Flange (ISO5210/1)
SBWG–BF	32 :1	360	266	11.6	30.9	8	20 (6x6)	F–07 F–05 (OPTION)
SBWG–BFTN								
SBWG–BFMT						32		
SBWG–BFDC	32 :1	320	236	12.0	29.4	7.25		
SBWG–BFDCM								
SBWG–0	36:1	780	575	13.4	58.1	9	28 (8x7)	F–10 F–07 (OPTION)
SBWG–0TN								
SBWG–0MT								
SBWG–0DC	36 :1	680	502	14.0	51.1	8.5		
SBWG–0DCM								
SBWG–00	40 :1	1200	885	14.1	85.0	10	36 (10x8)	F–12 F–10 (OPTION)
SBWG–00TN								
SBWG–00MT						40		
SBWG–00–1S	80 :1			26.0	46.2	20		
SBWG–00TN–1S								
SBWG–00MT–1S						80		
SBWG–00–1ST	P–40:1			14.1	85.0	10		
	S–80:1			26.0	46.2	20		
SBWG–00–1SD	160 :1			47.8	25.1	40		
SBWG–00TN–1SD								
SBWG–00MT–1SD						160		
SBWG–00–1SDT	P–80:1			26.0	46.2	20		
	S–160:1			47.8	25.1	40		
SBWG–00–2SD	320 :1			87.9	13.7	80		
SBWG–00–1S2B	160 :1			49.3	24.3	40		
SBWG–00–1SD2B	320 :1			90.8	13.2	80		
SBWG–00–2B	80 :1			26.8	44.8	20		
SBWG–00–2BD	160 :1			50.9	23.6	40		
SBWG–00–3W	1440 :1			189.3	6.3	360		
SBWG–00–3W2B	1440 :1			176.1	6.8	360		
SBWG–00DC	38 :1	980	723	14.1	69.3	9.5		
SBWG–00DCM								
SBWG–00DC–1S	67 :1			22.8	43.1	16.6		
SBWG–00DCM–1S								
SBWG–00DC–2SD	266 :1			77.0	12.7	66.5		
SBWG–00DCM–2SD								

Remark	
	• Ratio & Base specification to be changeable.
	• Max Output Torque includes safety factor.
	• If any request requirement, please contact us any time.

Size and component specification in this catalogue are subject to change without prior notice for quality improvement.

Model	Ratio	Max. Output Torque (N · m)	Max. Output Torque (Ft · lbf)	Mechanical Advantage (±10%)	Max. Input Torque (N · m)	Turns to Close (REV)	Bore Diameter (Stem, Max)	Mounting Flange (ISO5210/1)
SBWG-01	44 :1	2000	1475	15.1	132.2	11	46 (14x9)	F-14 F-12, F-10 (OPTION)
SBWG-01TN								
SBWG-01MT						44		
SBWG-01-1S	88 :1			27.8	71.8	22		
SBWG-01TN-1S								
SBWG-01MT-1S						88		
SBWG-01-1ST	P-44:1			15.1	132.2	11		
	S-88:1			27.8	71.8	22		
SBWG-01-1SD	176 :1			51.2	39.0	44		
SBWG-01TN-1SD								
SBWG-01MT-1SD						176		
SBWG-01-1SDT	P-88:1			27.8	71.8	22		
	S-176:1			51.2	39.0	44		
SBWG-01-2SD	352 :1			94.3	21.2	88		
SBWG-01-1S2B	176 :1			52.9	37.8	44		
SBWG-01-1SD2B	352 :1			97.3	20.5	88		
SBWG-01-2B	88 :1			28.8	69.6	22		
SBWG-01-2BD	176 :1			54.6	36.6	44		
SBWG-01-3W	1584 :1			203.0	9.9	396		
SBWG-01-3W2B	1584 :1			188.8	10.6	396		
SBWG-01DC	43 :1	1600	1180	15.0	106.8	10.8		
SBWG-01DCM								
SBWG-01DC-1S	75 :1			26.1	61.2	18.8		
SBWG-01DCM-1S								
SBWG-01DC-2SD	298:1			87.9	18.2	74.5		
SBWG-01DCM-2SD								
SBWG-02	48 :1	2800	2065	15.9	176.1	12	60 (18x11)	F-16 F-14, F-12 (OPTION)
SBWG-02TN								
SBWG-02MT						48		
SBWG-02-1S	121.6 :1			37.1	75.6	30.4		
SBWG-02TN-1S								
SBWG-02TM-1S						121.6		
SBWG-02-1ST	P-48:1			15.9	176.1	12		
	S-121.6:1			37.1	75.6	30.4		
SBWG-02-1SD	308.1 :1			86.4	32.4	77		
SBWG-02TN-1SD								
SBWG-02MT-1SD						308.1		
SBWG-02-1SDT	P-121.6:1			37.1	75.6	30.4		
	S-308.1:1			86.4	32.4	77		
SBWG-02-2SD	616.1 :1			158.9	17.6	154		
SBWG-02-1S2B	243.2 :1			70.4	39.8	60.8		
SBWG-02-1SD2B	616.1 :1			164.1	17.1	154		
SBWG-02-2B	120 :1			37.8	74.1	30		
SBWG-02-2BD	240 :1			71.7	39.0	60		
SBWG-02-3W	1920 :1			224.4	12.5	480		
SBWG-02-3W2B	1920 :1			208.7	13.4	480		
SBWG-02DC	46 :1	2500	1844	15.9	157.4	11.5		
SBWG-02DCM								
SBWG-02DC-1S	107 :1			34.0	73.5	26.8		
SBWG-02DCM-1S								
SBWG-02DC-2SD	429 :1			115.4	21.7	107.3		
SBWG-02DCM-2SD								
Remark	• Ratio & Base specification to be changeable. • Max Output Torque includes safety factor. • If any request requirement, please contact us any time.							

Size and component specification in this catalogue are subject to change without prior notice for quality improvement.

TECHNICAL DATA

Model	Ratio	Max. Output Torque (N · m)	Max. Output Torque (Ft · lbf)	Mechanical Advantage (±10%)	Max. Input Torque (N · m)	Turns to Close (REV)	Bore Diameter (Stem, Max)	Mounting Flange (ISO5210/1)
SBWG-03	52:1	4300	3172	16.9	253.7	13	75(20x12)	(F-20) F-16, F-14 (OPTION)
SBWG-03TN								
SBWG-03MT						52		
SBWG-03-1S	131.7:1			39.5	108.9	32.9		
SBWG-03TN-1S								
SBWG-03MT-1S						131.7		
SBWG-03-1ST	P-52:1			16.9	253.7	13		
	S-131.7:1			39.5	108.9	32.9		
SBWG-03-1SD	333.7:1			92.1	46.7	83.4		
SBWG-03TN-1SD								
SBWG-03MT-1SD						333.7		
SBWG-03-1SDT	P-131.7:1			39.5	108.9	32.9		
	S-333.7:1			92.1	46.7	83.4		
SBWG-03-2SD	667.4:1			169.4	25.4	166.9		
SBWG-03-1S2B	263.5:1			75.0	57.3	65.9		
SBWG-03-1SD2B	667.4:1			174.9	24.6	166.9		
SBWG-03-2B	130:1			40.2	106.8	32.5		
SBWG-03-2BD	260:1			76.5	56.2	65		
SBWG-03-3W	2080:1			233.1	18.4	520		
SBWG-03-3W2B	2080:1			216.8	19.8	520		
SBWG-03DC	50:1	3800	2803	16.9	224.6	12.5		
SBWG-03DCM								
SBWG-03DC-1S	117:1			36.4	104.3	29.3		
SBWG-03DCM-1S								
SBWG-03DC-2SD	467:1			123.0	30.9	116.8		
SBWG-03DCM-2SD								
SBWG-35	52:1	6100	4499	17.4	350.5	13	80(22x14)	F-25, (F-20) F-16(OPTION)
SBWG-35TN								
SBWG-35MT						52		
SBWG-35-1S	131.7:1			40.6	150.4	32.9		
SBWG-35TN-1S								
SBWG-35MT-1S						131.7		
SBWG-35-1ST	P-52:1			17.4	350.5	13		
	S-131.7:1			40.6	150.4	32.9		
SBWG-35-1SD	333.7:1			94.5	64.5	83.4		
SBWG-35TN-1SD								
SBWG-35MT-1SD						333.7		
SBWG-35-1SDT	P-131.7:1			40.6	150.4	32.9		
	S-333.7:1			94.5	64.5	83.4		
SBWG-35-2SD	667.4:1			173.9	35.1	166.9		
SBWG-35-1S2B	263.5:1			77.1	79.2	65.9		
SBWG-35-1SD2B	667.4:1			179.6	34.0	166.9		
SBWG-35-2B	130:1			41.3	147.6	32.5		
SBWG-35-2BD	260:1			78.5	77.7	65		
SBWG-35-3W	2288:1			263.3	23.2	572		
SBWG-35-3W2B	2288:1			244.9	24.9	572		
SBWG-35DC	52:1	5600	4130	20.1	278.6	13		
SBWG-35DCM								
SBWG-35DC-1S	118:1			41.9	133.6	29.5		
SBWG-35DCM-1S								
SBWG-35DC-2SD	471:1			141.9	39.5	117.9		
SBWG-35DCM-2SD								
Remark	• Ratio & Base specification to be changeable.							
	• Max Output Torque includes safety factor.							
	• If any request requirement, please contact us any time.							

Size and component specification in this catalogue are subject to change without prior notice for quality improvement.

Model	Ratio	Max. Output Torque (N · m)	Max. Output Torque (Ft · lbf)	Mechanical Advantage (±10%)	Max. Input Torque (N · m)	Turns to Close (REV)	Bore Diameter (Stem, Max)	Mounting Flange (ISO5210/1)
SBWG-04	56 :1	10400	7671	18.3	569.8	14	95 (25x14)	F-25 (F-20), F-16 (OPTION)
SBWG-04TN								
SBWG-04MT						56		
SBWG-04-1S	168 :1			50.4	206.5	42		
SBWG-04TN-1S								
SBWG-04MT-1S						168		
SBWG-04-1ST	P-56:1			18.3	569.8	14		
	S-168:1			50.4	206.5	42		
SBWG-04-1SD	504 :1			139.0	74.8	126		
SBWG-04TN-1SD								
SBWG-04MT-1SD						504		
SBWG-04-1SDT	P-168:1			50.4	206.5	42		
	S-504:1			139.0	74.8	126		
SBWG-04-2SD	1276.8 :1			324.0	32.1	319.2		
SBWG-04-1S2B	420 :1			119.6	86.9	105		
SBWG-04-1SD2B	1260 :1			330.2	31.5	315		
SBWG-04-2B	168 :1			52.0	199.9	42		
SBWG-04-2BD	420 :1			123.5	84.2	105		
SBWG-04-3W	2688 :1			290.2	35.8	672		
SBWG-04-3W2B	3360 :1			337.3	30.8	840		
SBWG-04DC	56 :1	9600	7081	21.2	452.7	14		
SBWG-04DCM								
SBWG-04DC-1S	149.3 :1			52.0	184.5	37.3		
SBWG-04DCM-1S								
SBWG-04DC-2SD	958 :1			282.5	34.0	239.5		
SBWG-04DCM-2SD								
SBWG-05	60:1	15900	11727	19.6	813.1	15	115 (32x18)	F-30 F-25 (OPTION)
SBWG-05TN								
SBWG-05MT						60		
SBWG-05-1S	180:1			54.0	294.6	45		
SBWG-05TN-1S								
SBWG-05MT-1S						180		
SBWG-05-1ST	P-60:1			19.6	813.1	15		
	S-180:1			54.0	294.6	45		
SBWG-05-1SD	540 :1			149.0	106.7	135		
SBWG-05TN-1SD								
SBWG-05MT-1SD						540		
SBWG-05-1SDT	P-180:1			54.0	294.6	45		
	S-540:1			149.0	106.7	135		
SBWG-05-2SD	1368:1			347.2	45.8	342		
SBWG-05-1S2B	450:1			128.2	124.0	112.5		
SBWG-05-1SD2B	1350:1			353.8	44.9	337.5		
SBWG-05-2B	180:1			55.7	285.3	45		
SBWG-05-2BD	450:1			132.4	120.1	112.5		
SBWG-05-3W	2880:1			305.9	52.0	720		
SBWG-05-3W2B	3600:1			355.6	44.7	900		
SBWG-05DC	60:1	14400	10621	22.4	644.0	15		
SBWG-05DCM								
SBWG-05DC-1S	160:1			54.9	262.5	40		
SBWG-05DCM-1S								
SBWG-05DC-2SD	1026:1			297.9	48.3	256.6		
SBWG-05DCM-2SD								

Remark

- Ratio & Base specification to be changeable.
- Max Output Torque includes safety factor.
- If any request requirement, please contact us any time.

Size and component specification in this catalogue are subject to change without prior notice for quality improvement.

TECHNICAL DATA

Model	Ratio	Max. Output Torque (N · m)	Max. Output Torque (Ft · lbf)	Mechanical Advantage (±10%)	Max. Input Torque (N · m)	Turns to Close (REV)	Bore Diameter (Stem, Max)	Mounting Flange (ISO5210/1)
SBWG–55	62:1	23500	17333	20.8	1129.8	15.5	125 (32x18)	F–30 F–25 (OPTION)
SBWG–55TN								
SBWG–55MT						62		
SBWG–55–1S	186:1			57.4	409.3	46.5		
SBWG–55TN–1S								
SBWG–55MT–1S						186		
SBWG–55–1ST	P–62:1			20.8	1129.8	15.5		
	S–186:1			57.4	409.3	46.5		
SBWG–55–1SD	558:1			158.5	148.3	139.5		
SBWG–55TN–1SD								
SBWG–55MT–1SD						558		
SBWG–55–1SDT	P–186:1			57.4	409.3	46.5		
	S–558:1			158.5	148.3	139.5		
SBWG–55–2SD	1413.6:1			369.3	63.6	353.4		
SBWG–55–1S2B	465:1			136.3	172.4	116.3		
SBWG–55–1SD2B	1395:1			376.3	62.4	348.8		
SBWG–55–2B	186:1			59.3	396.4	46.5		
SBWG–55–2BD	465:1			140.8	166.9	116.3		
SBWG–55–3W	3224:1			352.5	66.7	806		
SBWG–55–3W2B	4030:1			409.8	57.3	1007.5		
SBWG–55DC	62:1	21150	15599	23.6	897.5	15.5		
SBWG–55DCM								
SBWG–55DC–1S	165:1			57.8	365.8	41.3		
SBWG–55DCM–1S								
SBWG–55DC–2SD	1061:1			313.9	67.4	265.2		
SBWG–55DCM–2SD								
SBWG–06	64:1	32800	24192	20.2	1627.5	16	140 (36x20)	F–35 F–30, F–25 (OPTION)
SBWG–06TN								
SBWG–06MT						64		
SBWG–06–1S	256:1			74.2	442.2	64		
SBWG–06TN–1S								
SBWG–06MT–1S						256		
SBWG–06–1ST	P–64:1			20.2	1627.5	16		
	S–256:1			74.2	442.2	64		
SBWG–06–1SD	1024:1			272.9	120.2	256		
SBWG–06TN–1SD								
SBWG–06MT–1SD						1024		
SBWG–06–1SDT	P–256:1			74.2	442.2	64		
	S–1024:1			272.9	120.2	256		
SBWG–06–2SD	3072:1			753.3	43.5	768		
SBWG–06–1S2B	768:1			211.4	155.2	192		
SBWG–06–1SD2B	3072:1			777.9	42.2	768		
SBWG–06–2B	256:1			76.6	428.3	64		
SBWG–06–2BD	768:1			218.3	150.3	192		
SBWG–06–3W	3328:1			350.7	93.5	832		
SBWG–06–3W2B	4160:1			407.7	80.4	1040		
SBWG–06DC	64:1	29520	21773	23.3	1267.2	16		
SBWG–06DCM								
SBWG–06DC–1S	232:1			77.7	380.0	58		
SBWG–06DCM–1S								
SBWG–06DC–2SD	2088:1			591.8	49.9	522		
SBWG–06DCM–2SD								
Remark	• Ratio & Base specification to be changeable. • Max Output Torque includes safety factor. • If any request requirement, please contact us any time.							

Size and component specification in this catalogue are subject to change without prior notice for quality improvement.

Model	Ratio	Max. Output Torque (N · m)	Max. Output Torque (Ft · lbf)	Mechanical Advantage (±10%)	Max. Input Torque (N · m)	Turns to Close (REV)	Bore Diameter (Stem, Max)	Mounting Flange (ISO5210/1)
SBWG–07	68:1	51100	37689	22.0	2323.0	17	180 (45x25)	F–40 F–35,F–30 (OPTION)
SBWG–07TN								
SBWG–07MT						68		
SBWG–07–1S	272:1			80.9	631.3	68		
SBWG–07TN–1S								
SBWG–07MT–1S						272		
SBWG–07–1ST	P–68:1			22.0	2323.0	17		
	S–272:1			80.9	631.3	68		
SBWG–07–1SD	1088:1			297.9	171.5	272		
SBWG–07TN–1SD								
SBWG–07MT–1SD						1088		
SBWG–07–1SDT	P–272:1			80.9	631.3	68		
	S–1088:1			297.9	171.5	272		
SBWG–07–2SD	3264:1			822.2	62.2	816		
SBWG–07–1S2B	816:1			230.7	221.5	204		
SBWG–07–1SD2B	3264:1			849.0	60.2	816		
SBWG–07–2B	272:1			83.6	611.3	68		
SBWG–07–2BD	816:1			238.2	214.5	204		
SBWG–07–3W	3536:1			382.8	133.5	884		
SBWG–07–3W2B	4420:1			445.0	114.8	1105		
SBWG–07DC	68:1	45000	33190	25.0	1802.9	17		
SBWG–07DCM								
SBWG–07DC–1S	247:1			83.2	540.6	61.6		
SBWG–07DCM–1S								
SBWG–07DC–2SD	2218:1			633.9	71.0	554.5		
SBWG–07DCM–2SD								
SBWG–75	66:1	81500	60111	23.1	3532.3	16.5	210 (50x28)	F–48 F–40, F–35 (OPTION)
SBWG–75TN								
SBWG–75MT						66		
SBWG–75–1S	330:1			106.1	767.9	82.5		
SBWG–75TN–1S								
SBWG–75MT–1S						330		
SBWG–75–1ST	P–66:1			23.1	3532.3	16.5		
	S–330:1			106.1	767.9	82.5		
SBWG–75–1SD	1650:1			488.2	166.9	412.5		
SBWG–75TN–1SD								
SBWG–75MT–1SD						1650		
SBWG–75–1SDT	P–330:1			106.1	767.9	82.5		
	S-1650:1			488.2	166.9	412.5		
SBWG–75–2SD	6600:1			1796.7	45.4	1650		
SBWG–75–1S2B	1320:1			403.3	202.1	330		
SBWG–75–1SD2B	6600:1			1855.3	43.9	1650		
SBWG–75–2B	330:1			109.6	743.6	82.5		
SBWG–75–2BD	990:1			312.7	240.9	268.1		
SBWG–75–3W	3696:1			421.1	193.5	924		
SBWG–75–3W2B	5544:1			587.4	138.7	1386		
SBWG–75DC	65:1	73350	54100	25.7	2856.0	16.3		
SBWG–75DCM								
SBWG–75DC–1S	290:1			105.5	695.0	72.6		
SBWG–75DCM–1S								
SBWG–75DC–2SD	4645:1			1429.3	51.3	1161.3		
SBWG–75DCM–2SD								
Remark	• Ratio & Base specification to be changeable. • Max Output Torque includes safety factor. • If any request requirement, please contact us any time.							

Size and component specification in this catalogue are subject to change without prior notice for quality improvement.

TECHNICAL DATA

Model	Ratio	Max. Output Torque (N · m)	Max. Output Torque (Ft · lbf)	Mechanical Advantage (±10%)	Max. Input Torque (N · m)	Turns to Close (REV)	Bore Diameter (Stem, Max)	Mounting Flange (ISO5210/1)
SBWG–08	66:1	121000	89245	24.3	4978.0	16.5	250 (56x32)	F–48 F–40 (OPTION)
SBWG–08TN								
SBWG–08MT						66		
SBWG–08–1S	330:1			111.8	1082.2	82.5		
SBWG–08TN–1S								
SBWG–08MT–1S						330		
SBWG–08–1ST	P–66:1			24.3	4978.0	16.5		
	S–330:1			111.8	1082.2	82.5		
SBWG–08–1SD	1650:1			514.3	235.3	412.5		
SBWG–08TN–1SD								
SBWG–08MT–1SD						1650		
SBWG–08–1SDT	P–330:1			111.8	1082.2	82.5		
	S–1650:1			514.3	235.3	412.5		
SBWG–08–2SD	6600:1			1892.8	63.9	1650		
SBWG–08–1S2B	1320:1			424.9	284.8	330		
SBWG–08–1SD2B	6600:1			1954.5	61.9	1650		
SBWG–08–2B	363:1			127.0	952.7	90.8		
SBWG–08–2BD	1270.5:1			422.3	286.5	317.6		
SBWG–08–3W	3960:1			475.3	254.6	990		
SBWG–08–3W2B	5940:1			663.1	182.5	1485		
SBWG–08DC	65:1	108900		26.4	4120.7	16.3		
SBWG–08DCM								
SBWG–08DC–1S	290:1			108.6	1002.8	72.6		
SBWG–08DCM–1S								
SBWG–08DC–2SD	4645:1			1470.7	74.0	1161.3		
SBWG–08DCM–2SD								
SBWG–09	66:1	192500	141981	25.9	7429.6	16.5	280 (63x32)	F–60 F–48 (OPTION)
SBWG–09TN								
SBWG–09MT						66		
SBWG–09–1S	330:1			119.2	1615.1	82.5		
SBWG–09TN–1S								
SBWG–09MT–1S						330		
SBWG–09–1ST	P–66:1			25.9	7429.6	16.5		
	S–330:1			119.2	1615.1	82.5		
SBWG–09–1SD	1650:1			548.3	351.1	412.5		
SBWG–09TN–1SD								
SBWG–09MT–1SD						1650		
SBWG–09–1SDT	P–330:1			119.2	1615.1	82.5		
	S–1650:1			548.3	351.1	412.5		
SBWG–09–2SD	6600:1			2017.6	95.4	1650		
SBWG–09–1S2B	1320:1			452.9	425.0	330		
SBWG–09–1SD2B	6600:1			2083.4	92.4	1650		
SBWG–09–2B	396:1			147.7	1303.4	99		
SBWG–09–2BD	1584:1			561.2	343.0	396		
SBWG–09–3W	4092:1			538.9	357.2	1023		
SBWG–09–3W2B	6138:1			751.8	256.0	1534.5		
SBWG–09DC	64:1	178000	131286	27.0	6604.5	16		
SBWG–09DCM								
SBWG–09DC–1S	286:1			110.8	1607.2	71.5		
SBWG–09DCM–1S								
SBWG–09DC–2SD	4574:1			1499.9	118.7	1143.5		
SBWG–09DCM–2SD								
Remark	• Ratio & Base specification to be changeable. • Max Output Torque includes safety factor. • If any request requirement, please contact us any time.							

Size and component specitication in this catalogue are subject to change without prior notice for quality improvement.

Model	Ratio	Max. Output Torque (N · m)	Max. Output Torque (Ft · lbf)	Mechanical Advantage (±10%)	Max. Input Torque (N · m)	Turns to Close (REV)	Bore Diameter (Stem, Max)	Mounting Flange (ISO5210/1)
SBWG-10	64:1	275000	202830	24.3	11313.4	16	320 (70x36)	F-60
SBWG-10TN								
SBWG-10MT						64		
SBWG-10-1S	320:1			111.8	2459.4	80		
SBWG-10TN-1S								
SBWG-10MT-1S						320		
SBWG-10-1ST	P-64:1			24.3	11313.4	16		
	S-320:1			111.8	2459.4	80		
SBWG-10-1SD	1600:1			514.3	534.7	400		
SBWG-10TN-1SD								
SBWG-10MT-1SD						1600		
SBWG-10-1SDT	P-320:1			111.8	2459.4	80		
	S-1600:1			514.3	534.7	400		
SBWG-10-2SD	8000:1			2366.0	116.2	2000		
SBWG-10-1S2B	1600:1			531.1	517.8	400		
SBWG-10-1SD2B	8000:1			2443.1	112.6	2000		
SBWG-10-2B	416:1			150.1	1832.1	104		
SBWG-10-2BD	2080:1			713.0	385.7	520		
SBWG-10-3W	4096:1			489.9	561.3	1024		
SBWG-10-3W2B	8192:1			911.2	301.8	2048		
SBWG-10DC	62:1	253000	186600	25.1	10075.7	15.5		
SBWG-10DCM								
SBWG-10DC-1S	277:1			106.2	2382.2	69.2		
SBWG-10DCM-1S								
SBWG-10DC-2SD	6929.4:1			2404.5	105.2	1732.3		
SBWG-10DCM-2SD								
SBWG-11	68:1	442000	326002	26.2	16882.0	17	360 (80x40)	F-60
SBWG-11TN								
SBWG-11MT						68		
SBWG-11-1S	340:1			120.4	3670.0	85		
SBWG-11TN-1S								
SBWG-11MT-1S						340		
SBWG-11-1ST	P-68:1			26.2	16882.0	17		
	S-340:1			120.4	3670.0	85		
SBWG-11-1SD	1700:1			554.0	797.8	425		
SBWG-11TN-1SD								
SBWG-11MT-1SD						1700		
SBWG-11-1SDT	P-340:1			120.4	3670.0	85		
	S-1700:1			554.0	797.8	425		
SBWG-11-2SD	8500:1			2548.4	173.4	2125		
SBWG-11-1S2B	1700:1			572.1	772.6	425		
SBWG-11-1SD2B	8500:1			2631.5	168.0	2125		
SBWG-11-2B	442:1			161.7	2733.9	110.5		
SBWG-11-2BD	2210:1			767.9	575.6	552.5		
SBWG-11-3W	4624:1			575.9	767.5	1156		
SBWG-11-3W2B	9248:1			1071.2	412.6	2312		

Remark	
	• Ratio & Base specification to be changeable.
	• Max Output Torque includes safety factor.
	• If any request requirement, please contact us any time.

Size and component specification in this catalogue are subject to change without prior notice for quality improvement.

TECHNICAL DATA

Model	Ratio	Max. Output Torque (N · m)	Max. Output Torque (Ft · lbf)	Mechanical Advantage (±10%)	Max. Input Torque (N · m)	Turns to Close (REV)	Bore Diameter (Stem, Max)	Mounting Flange (ISO5210/1)
SBWG-12	70 :1	610000	449913	27.1	22546.0	17.5	400 (90x45)	F-80 F-60 (OPTION)
SBWG-12TN								
SBWG-12MT						70		
SBWG-12-1S	350 :1			124.5	4901.3	87.5		
SBWG-12TN-1S								
SBWG-12MT-1S						350		
SBWG-12-1ST	P-70:1			27.1	22546.0	17.5		
	S-350:1			124.5	4901.3	87.5		
SBWG-12-1SD	1750 :1			572.5	1065.5	437.5		
SBWG-12TN-1SD								
SBWG-12MT-1SD						1750		
SBWG-12-1SDT	P-350:1			124.5	4901.3	87.5		
	S-1750:1			572.5	1065.5	437.5		
SBWG-12-2SD	8750 :1			2633.5	231.6	2187.5		
SBWG-12-1S2B	1925 :1			650.3	938.0	481.3		
SBWG-12-1SD2B	9625 :1			2991.3	203.9	2406.3		
SBWG-12-2B	490 :1			179.9	3390.4	122.5		
SBWG-12-2BD	2695 :1			940.1	648.9	673.8		
SBWG-12-3W	4620 :1			624.3	977.2	1155		
SBWG-12-3W2B	11550 :1			1451.4	420.3	2887.5		
SBWG-13	72 :1	970000	715435	28.0	34640.7	18	450 (100x50)	F-80 F-60 (OPTION)
SBWG-13TN								
SBWG-13MT						72		
SBWG-13-1S	360 :1			128.8	7530.6	90		
SBWG-13TN-1S								
SBWG-13MT-1S						360		
SBWG-13-1ST	P-72:1			28.0	34640.7	18		
	S-360:1			128.8	7530.6	90		
SBWG-13-1SD	1800 :1			592.5	1637.1	450		
SBWG-13TN-1SD								
SBWG-13MT-1SD						1800		
SBWG-13-1SDT	P-360:1			128.8	7530.6	90		
	S-1800:1			592.5	1637.1	450		
SBWG-13-2SD	9000 :1			2725.6	355.9	2250		
SBWG-13-1S2B	2160 :1			734.2	1321.2	540		
SBWG-13-1SD2B	10800 :1			3377.3	287.2	2700		
SBWG-13-2B	544 :1			201.0	4826.1	136		
SBWG-13-2BD	3264 :1			1145.6	846.7	816		
SBWG-13-3W	4752 :1			680.6	1425.1	1188		
SBWG-13-3W2B	13068 :1			1740.7	557.2	3267		
Remark	• Ratio & Base specification to be changeable. • Max Output Torque includes safety factor. • If any request requirement, please contact us any time.							

Size and component specitication in this catalogue are subject to change without prior notice for quality improvement.

Model	Ratio	Max. Output Torque		Mechanical Advantage (±10%)	Max. Input Torque (N · m)	Turns to Close (REV)	Bore Diameter (Stem. Max)	Mounting Flange (ISO5210/1)
		(N · m)	(Ft · lbf)					
Remark	• Ratio & Base specification to be changeable. • Max Output Torque includes safety factor. • If any request requirement, please contact us any time.							

Size and component specitication in this catalogue are subject to change without prior notice for quality improvement.

TECHNICAL DATA

Model	Ratio	Max. Output Torque		Mechanical Advantage (±10%)	Max. Input Torque (N · m)	Turns to Close (REV)	Bore Diameter (Stem. Max)	Mounting Flange (ISO5210/1)
		(N · m)	(Ft · lbf)					
Remark	• Ratio & Base specification to be changeable. • Max Output Torque includes safety factor. • If any request requirement, please contact us any time.							

Size and component specitication in this catalogue are subject to change without prior notice for quality improvement.

TECHNICAL DATA

Model	Ratio	Max. Output Torque		Mechanical Advantage (±10%)	Max. Input Torque (N · m)	Turns to Close (REV)	Bore Diameter (Stem. Max)	Mounting Flange (ISO5210/1)
		(N · m)	(Ft · lbf)					
Remark	• Ratio & Base specification to be changeable. • Max Output Torque includes safety factor. • If any request requirement, please contact us any time.							

Size and component specitication in this catalogue are subject to change without prior notice for quality improvement.

Technical Data

SAMBO Warranty

- SAMBO Industrial Co., Ltd. warrants its products (including parts) to the original purchaser for a period of two years from and after the date of delivery to the original purchaser, against defects in material,workmanship under proper and normal use and service and not caused of installations, improper maintenance and repairs, modifications or alternations.

- Purchaser shall give notice to SAMBO upon finding of any defect or assuming defect and, SAMBO has privilege to check the facts of the defect.

- SAMBO sole obligation under this warranty shall be limited to the follow :
  (1) repair of the material or,
  (2) replacement of the parts and material or,
  (3) refund the purchase price or collect the defected products from the original purchaser.

- SAMBO is not responsible to claim for consequential damage, loss or expense of any kind arising out of the defect.
- The scope and limitation of warrant can be changed through the agreement between SAMBO and purchaser.

- This catalog is for reference only.
- The data presented in this catalog is for general information only. Manufacturer is not responsible for acceptability of these products in relation to system requirements.
- Also, contents of this catalog can be changed when improvements of product design and performance without notice .

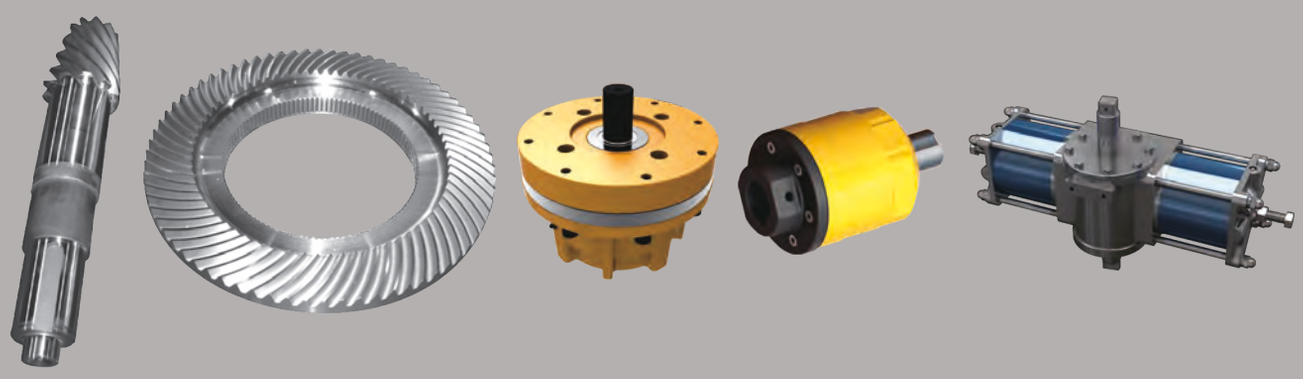

Global Leader
SAMBO
GEAR ACTUATORS for Industrial Valves

The World's Highest Quality!

EPILOGUE

Publisher : Mr. Ra Moo Sang
English Adviser : Mr. Bob Kornsey

Many thanks for everyone' s efforts to make it.
We hope this catalogue will be helpful for international business.





Innovation & Change for Customer

Global Leader

SAMBO

GEAR ACTUATORS



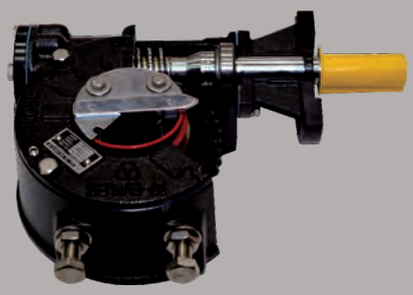


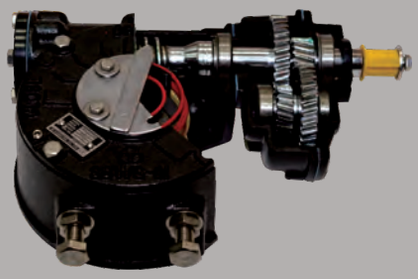

Size and component specitication in this catalgue are subject to change without prior notice for quality improvement.

High Quality Gear Actuators
High Performance & Efficiency

At SAMBO, we promise to continually improve our products and commitment to quality with engineering innovation, young passion and management expertise.
We are committed to ensuring that our customers are our No. 1 priority worldwide. If you have any suggestions on how we can serve you better, please feel free to share your advice with us.

Innovation & Change for Customer

SAMBO GEAR ACTUATORS

The World's Highest Quality!

SAMBO
www.sambo21.com

#11, Saebyeok-ro 215(ibaeksibo)beon-gil, Sasang-gu, Busan, Korea
TEL 82-51-316-2882 FAX 82-51-316-2880
Web site http://www.sambo21.com
E-mail sambo@sambo21.com

2020.12.NO.8